City of Clintonville

Common Council Meeting
City Hall
50 10th St., Clintonville, WI 54929
6:00 PM – Tuesday, October 6, 2026

Please turn off/silence cell phones and any other electronics that could be distracting during our meeting.

Agenda

1. Call to Order; Roll Call; Pledge of Allegiance
2. Approval of Agenda
3. Correspondence
4. Citizens Forum – This is a chance for citizens to make comments. No action or lengthy discussions can take place as a result of comments made at this time.
5. Mayor's Comments
6. Plan Commission – Chair Schirpke
    a. Discussion/Possible Action Regarding Proposed Planned Unit Development (PUD) - CI05 Clintonville WI LLC (Hoffmaster), 255 Spring St, Parcels 30-24-14-10 and 30-24-13-1
7. Adjournment

MSA Memo

To: City of Clintonville Plan Commission

From: Steve Tremlett and John Schwartz, MSA

Subject: Hoffmaster / Creative Converting Planned Unit Development – Combined General Development Plan and Specific Implementation Plan

Date: October 1st, 2026

Request

Hoffmaster Creative Converting Division is requesting approval of a Planned Unit Development (PUD) for its existing manufacturing property at 255 Spring Street. This review is on a combined General Development Plan (GDP) and Specific Implementation Plan (SIP) to allow a rezone from I-1 Industrial to PUD.

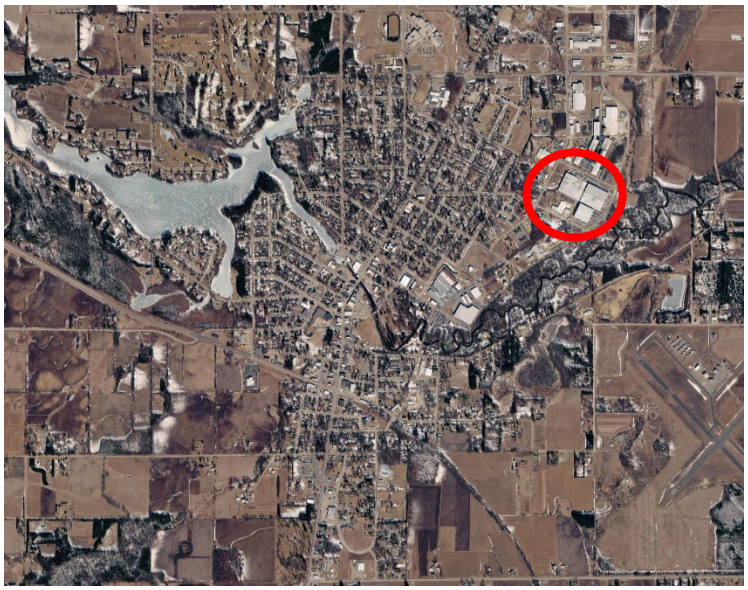

The primary purpose of the PUD is to accommodate an approximate 86,500 square foot building addition, along with employee and trailer parking expansions.

Background Information

Hoffmaster operates an existing manufacturing facility on the property and states the present facility is at capacity. The proposal also includes a parking expansion in the northeast portion of the site and conversion of some of the southeast portion of the site for semi-trailer parking/loading. Exterior materials for the building addition are proposed to match the existing facility.

The property is bounded by Staff Sergeant Warren Hansen Drive to the east, 16th Street to the south, Industrial Avenue to the west, and Spring Street to the north. The site of the proposed addition was once a separate vacant parcel but the lots have been recently combined via Certified Survey Map (CSM). Public sewer and water presently serve the site and the applicant proposes an additional 2-inch water service and 4-inch sanitary sewer service from Industrial Avenue. The existing fire-suppression system would also be extended into the addition. Final adequacy and design of these facilities should remain subject to City engineering and utility review.

The proposed 288 parking spaces exceed the 275 spaces required spaces under the City's employee-based parking standard. No new roads are proposed, and the applicant states that the surrounding street system provides adequate access

Property: 255 Spring Street
Existing Zoning: I-1 Industrial
Proposed Zoning: Planned Unit Development (PUD)
Parcel: Lot 1, CSM 8469
Site Area: 23.1 acres
Proposed Building Addition: Approximately 86,476 square feet
Total Building Area after Development: Approximately 616,402 square feet / 61.3% of the site

Paved/Gravel/Concrete Area: Approximately 250,239 square feet / 24.8% of the site
Green Space: Approximately 139,595 square feet / 13.9% of the site
Proposed Parking: 288 vehicle stalls, including 9 accessible stalls
Employees: Approximately 550

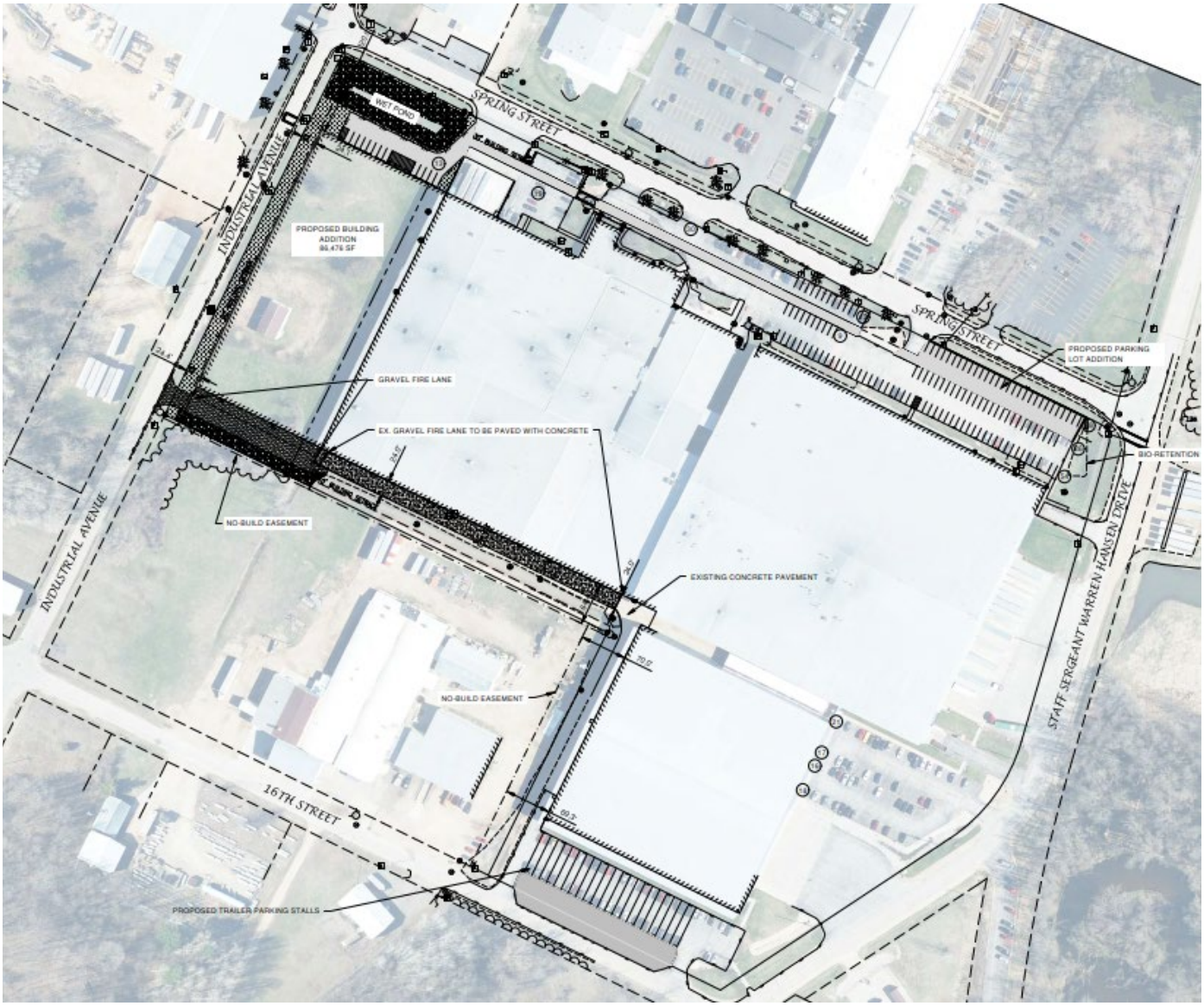

Existing I-1 Zoning Standards

The existing I-1 Industrial District is intended for industrial uses, including converted paper and paperboard products. The dimensional standards applicable are:

- Minimum lot area: 20,000 square feet
- Minimum lot width: 100 feet
- Front setback: 30 feet
- Side setback: 10 feet
- Side street setback: 20 feet
- Rear setback: 30 feet
- Building height: 35 feet maximum as permitted-by right use; heights above 35 feet require conditional use approval
- Maximum lot area coverage: 70%
- Parking and loading are subject to the general requirements of §17.11

Consistency With the Comprehensive Plan

The property is presently developed and used for industrial manufacturing. The City's Comprehensive Plan designates the property's future land use as Industrial. The proposed PUD would continue the existing manufacturing use while allowing expansion of the established industrial facility.

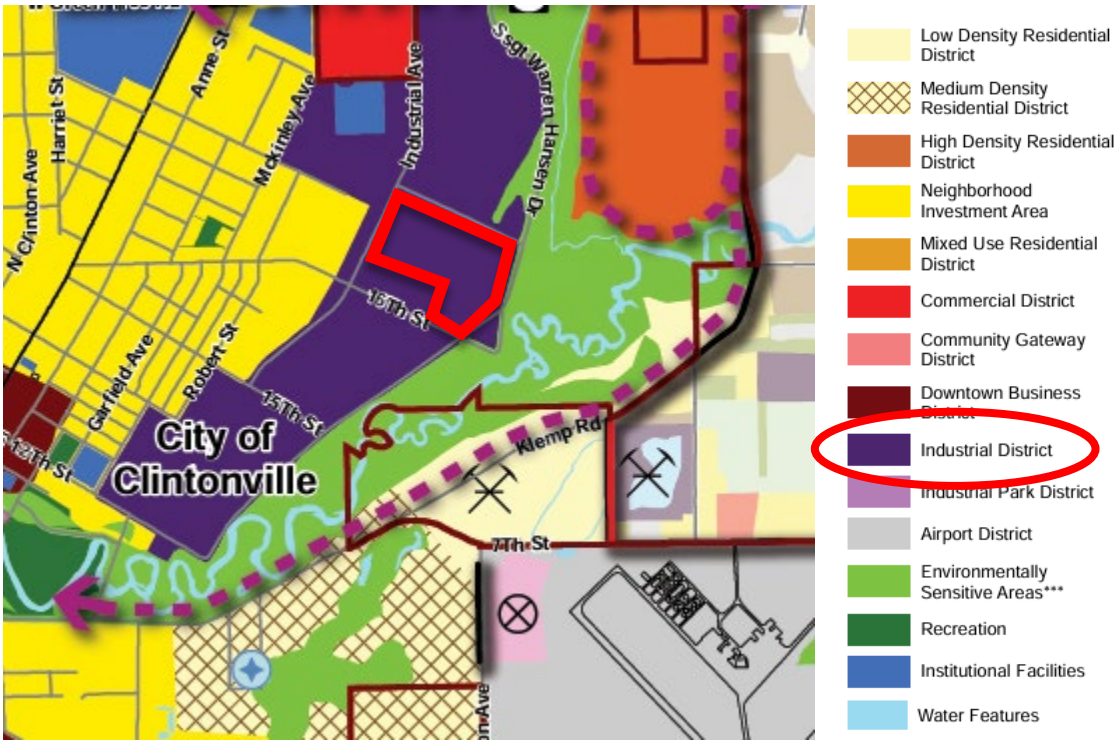

Impacts to Adjacent Properties

The building addition and associated parking and loading improvements would occur within the existing industrial campus, which is bounded by public streets on all four sides. All uses surrounding the parcel are similarly industrial. The proposal includes additional stormwater-management facilities and provides parking in excess of the employee-based minimum required by the Zoning Code. No significant impacts to adjacent properties have been identified by MSA.

Planned Unit Development Purpose and Standards

Section 17.28 establishes the PUD as a voluntary zoning framework intended to allow additional flexibility in the development of land through approval of a comprehensive and coordinated plan. There are generally two stages of PUD approval: General Development Plan (GDP) and Specific Implementation Plan (SIP). Unlike I-1, PUD does not establish predetermined standards like those outlined above. Instead, the standards incorporated into approved GDP become the enforceable zoning requirements for the property. The SIP provides construction plans and identifies compliance and/or minor changes to the requirements outlined in the GDP. The applicant is providing a combined GDP and SIP document, covering standards and final plans.

General Development Plan

Section 17.28(4)(a) requires the GDP to include a description of the general character of the development, a project-area map showing its relationship to surrounding properties and existing site features, and a project plan containing sufficient detail to evaluate the PUD approval criteria. Optionally, the ordinance allows the City to request information regarding ownership associations, deed restrictions, or private common services.

The GDP includes a narrative, project-area map, and detailed plans. These plans requests a maximum lot area coverage of 88% and a maximum building height of 40 feet without requiring a separate conditional use permit. The GDP does not establish the remaining bulk standards required of approvable GDP. A condition should outline that all remaining requirements of I-1 zoning district and other city codes not defined in the GDP shall be followed.

Per Section 17.28(3), the review of the PUD shall meet the following criteria.

1. *Character and Intensity of Land Use. In a PUD the uses and their intensity, appearance and arrangement shall be of a visual and operational character which:*
    - *(a) Are compatible with the physical nature of the site or area.*
    - *(b) Would produce an attractive environment of sustained aesthetic desirability, economic stability and functional practicality compatible with the general development plan.*
    - *(c) Would not adversely affect the anticipated provision for school or other municipal service unless jointly resolved.*
    - *(d) Would not create a traffic or parking demand incompatible with the existing or proposed facilities to serve it unless jointly resolved.*
2. *Economic Impact. PUD shall not adversely affect the economic prosperity of the City or of surrounding properties.*
3. *Preservation and Maintenance of Open Space. In a PUD adequate provision for the improvement and continuing preservation and maintenance open space shall be made.*
4. *Implementation Schedule. A PUD shall include suitable assurances that each phase could be completed in a manner which would not result in an adverse effect upon the community as a result of termination at that point.*

Typically, PUD allows for flexibility in requirements with potential increased public benefit. This can be based on jobs and tax base, or it can be in higher-quality building design, increased landscaping, etc. he submitted site plan retains approximately 139,595 square feet, or 13.9% of the site, as green space. The plans also require disturbed areas to be topsoiled, seeded, and mulched. I have highlighted Criteria 1(b) above, as one item to consider further enhancement. The current zoning does not require landscaping in I-1 zoning district; however, it does in I-2 zoning district. While most buildings (including this building) have minimal to no landcaping, there could be an argument for landscaping inclusion in this project. This should be a discussion item for Plan Commission and if any landscaping requirement is desired it would be as a condition of the GDP approval. Landscaping good be generally on the site, around/in parking lots, or along the foundation of the building.

Specific Implementation Plan

Section 17.28(4)(c) identifies 13 categories of information to be included with an SIP, although the Plan Commission may waive specific documents. The submitted application includes:

- project-area map
- parking and circulation plans
- CSM
- building plans
- utility plans
- grading plans
- financing info
- economic-impact info
- construction schedule

Submittal requirements that weren't included were:

- Location and treatment of open space and recreation space - *Applicant states no recreational open space is proposed, OK*
- Location of areas being dedicated to the public - *Applicant states none are proposed, OK*
- Agreements, bylaws, provisions, or covenants governing organizational structure – *One parcel, no agreement needed, OK*
- Landscape plan and plant list – *if no landscaping is required, Plan Commission can recommend a waiver per Section 17.28(4)(c).*
- Stormwater Management Plans (previously shared plans for the Northwest building and parking expansion; *however, not included in the current submittal nor does it evaluate the northeast and southeast improvements)*

Landscaping and Open Space

If no landscaping standard is required, Plan Commission can waive the Landscaping Plan and Plant List (under 17.28(4)(c)(9) based on the industrial character of the site and surrounding area. This item should be specifically addressed by the Plan Commission.

Lot Coverage

The Zoning Code defines lot area coverage as the area of a lot consisting of impervious surface in relation to the total lot area. The I-1 District establishes a maximum lot area coverage of **70%.** The submitted overall site plan identifies approximately 61.3% of the site as building area, 24.8% as asphalt/gravel/concrete area, and 13.9% as green space. Building area plus the identified paved/gravel/concrete area therefore represents approximately **86.1%** of the site.

The applicant requests that the PUD establish a maximum lot area coverage of **88%**, providing limited flexibility beyond the improvements presently depicted on the site plan. Development exceeding that standard would require the developer to come back for amendment review under the PUD amendment provisions.

Stormwater and Utilities

The project proposes a new wet detention pond in the northwest portion of the property to serve the building addition and related pavement, together with a new bioretention pond serving the proposed northeast parking expansion. The previously submitted stormwater management plan (not included in the document currently) did not evaluate the northeast biorientation basin. The applicant is stating the southeast improvement will be managed by the basin in an existing stormwater pond east of Staff Sergeant Warren Hansen Drive; however, the previous stormwater management plan has not been provided to confirm this improvement will not exceed the capacity of that pond.

Final stormwater plans shall remain subject to review and acceptance by the City Engineer and other applicable reviewing agencies prior to construction of the affected improvements.

PUD Review and Approval Procedure

The ordinance expressly authorizes approval of the GDP and SIP at the same time. Section 17.28 provides that if a GDP and SIP are approved simultaneously, both must be recorded within twelve months of Common Council approval or the approvals become null and void.

The ordinance establishes the following review sequence:

1. The Plan Commission reviews the GDP and forwards a recommendation to the Common Council to approve as submitted, approve with modifications, or disapprove.
2. The Common Council then determines whether to initiate the PUD zoning amendment and schedule the required public hearing. Since previous review has already recommended the PUD for this property, a public hearing has been scheduled for 10/13 should Plan Commission and Council move this forward tonight.
3. The Plan Commission also reviews the SIP and makes a recommendation to the Common Council.
4. Following the required hearing and consideration of the recommendations, the Common Council may approve the PUD rezoning and combined GDP/SIP.

Following approval, the approved building, site, operational plans, and applicable agreements must be recorded with the Waupaca County Register of Deeds before issuance of a building permit. Subsequent changes must be submitted to the Plan Commission, with substantial alterations subject to the SIP review procedure.

Potential Action

If the Plan Commission finds that the application satisfies the requirements and approval criteria of §17.28, MSA suggests a motion to recommend **conditional approval** of the Hoffmaster/Creative Converting PUD rezoning and combined General Development Plan and Specific Implementation Plan to the Common Council subject to the following conditions:

1. Prior to issuing an approved rezone to PUD, the following text in the GDP/SIP document shall be updated and confirmed by City staff:
    a. Add to the cover the following: “General Development Plan and Specific Implementation Plan Combined”.

b. Revise Section 3 of the GDP to be called “GDP Standards and Project Plan”. Add the following sentence: “The development shall follow I-1 Industrial zoning district standards, except increasing lot area coverage from 70% to 88% and increasing the building height maximum from 35 feet to 40 feet by right. Other City code requirements shall apply if not explicitly identified in this document.”
c. Remove the last sentence under Section 1.
d. Include Stormwater Management Plan(s) as an appendix.

2. Prior to issuing an occupancy permit, a stormwater management plan(s) shall be approved by City that covers all improvement project areas.
3. Engineer review and acceptance of construction plans for parking lot improvements in the northeast and southeast is required before constructing said improvements.



Application for

Planned Unit Development (PUD) *for Hoffmaster Development City of Clintonville, WI*

Prepared for

Hoffmaster (Creative Converting)

September 23, 2026

Aaron Breitenfeldt, P.E.

Robert E. Lee & Associates, Inc.

1250 Centennial Centre Blvd, Hobart, WI 54155

920-662-9641 | abreitenfeldt@releeinc.com | releeinc.com

REL Engineering | Environmental
Surveying | Ecological

Robert E. Lee & Associates, Inc.
Engineering | Environmental | Surveying | Ecological

1250 Centennial Centre Blvd
Hobart, WI 54155
920-662-9641
releeinc.com

September 23, 2026

Mr. Craig Moser, City Administrator
CITY OF CLINTONVILLE
50 10th Street
Clintonville, WI 54929

RE: Hoffmaster Planned Unit Development (PUD) Application – 2026 Building and Site Improvements Project

Mr. Moser:

On behalf of Hoffmaster, Robert E. Lee & Associates, Inc. is submitting (for your review) the following Planned Unit Development (PUD) application information for both the General Development Plan and the Specific Implementation Plan.

If you have any questions or comments regarding this matter, please contact our office.

Sincerely,

ROBERT E. LEE & ASSOCIATES, INC.

Aaron J. Breitenfeldt, P.E.
Sr. Project Manager

AJB/NJM

ENC.

TABLE OF CONTENTS

PAGE #

GENERAL DEVELOPMENT PLAN 1

1. General Project Description 1
2. Overall Project Area Map 1
3. Project Plan 1

SPECIFIC IMPLEMENTATION PLAN 2

1. Overall Project Area Map 2
2. Pattern Of Public And Private Roads, Driveways, Walkways And Parking Facilities. 2
3. Detailed Lot Layout 2
4. Building Descriptions 2
5. Sanitary Sewer And Water Main 2
6. Grading Plan And Storm Drainage System 3
7. Location And Treatment Of Open Space And Recreational Or Other Amenities 3
8. Location And Description Of Areas To Be Dedicated To The Public 3
9. Landscape Plan And Plant List 3
10. Proof Of Financial Capability 3
11. Analysis Of Economic Impact Upon The Community 3
12. Construction Schedule 4
13. Agreements, Bylaws, Provisions, Or Covenenants 4

TABLE OF APPENDICES

APPENDIX #	DESCRIPTION
A	Detailed Project Plans
B	Certified Survey Map
C	Construction Schedule

GENERAL DEVELOPMENT PLAN

1. GENERAL PROJECT DESCRIPTION

Hoffmaster (Creative Converting) is a long-time manufacturing company in the City of Clintonville and is currently at capacity at their existing office and manufacturing facility located at 255 Spring Street. As such, Hoffmaster is proposing to construct a proposed 86,500 square-foot building addition, as well as expand its existing paved employee and semi-trailer parking areas to increase its manufacturing capacity on this property. The proposed expansion represents a $65 million dollar investment into the City and the addition of over 100 jobs. To construct the proposed project, Hoffmaster is proposing to rezone their property to a PUD in order to provide for increased flexibility in regard to zoning requirements. Specifically, the proposed PUD would allow for an increase in impervious lot area coverage to 88% and buildings to be constructed to a height of 40' without the need for a conditional use.

2. OVERALL PROJECT AREA MAP

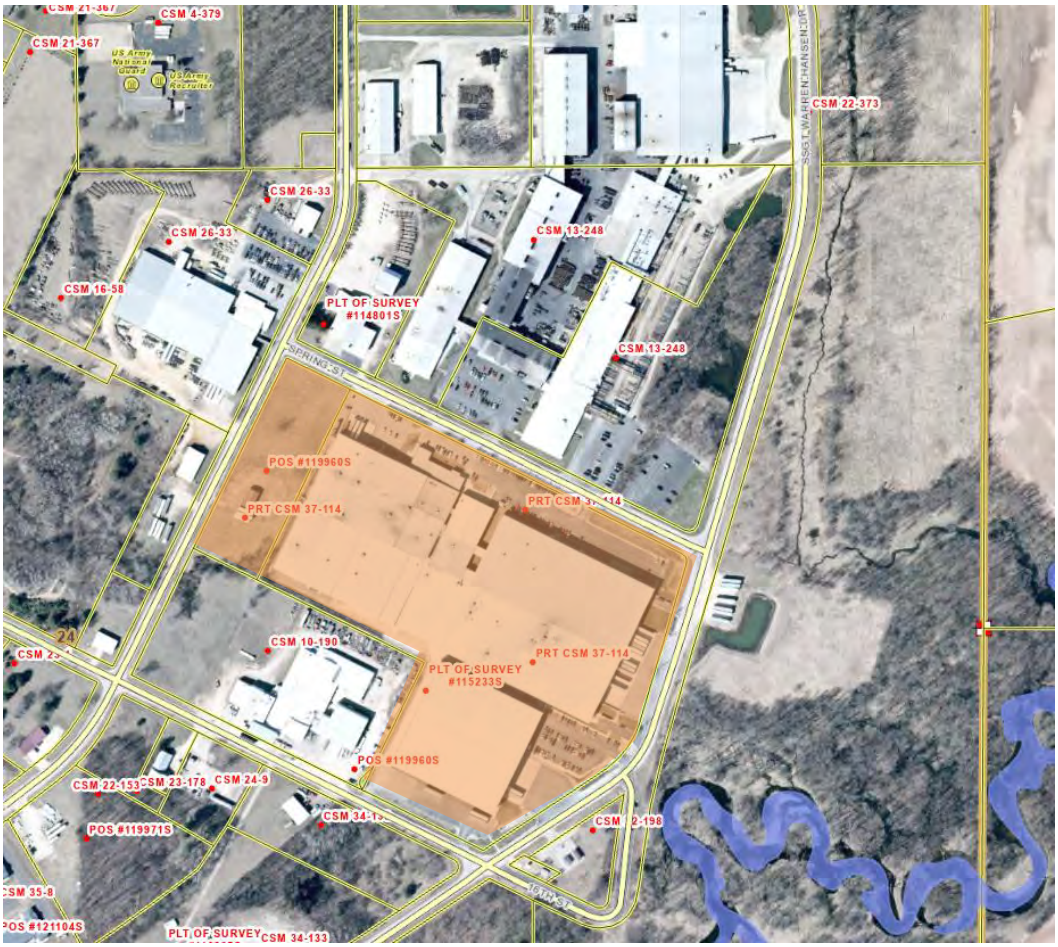

FIGURE 1: OVERALL PROJECT AREA MAP

3. PROJECT PLAN

See attached detailed plan set included in Appendix A.

SPECIFIC IMPLEMENTATION PLAN

1. OVERALL PROJECT AREA MAP

See Figure 1 showing the proposed project area in relationship to the surrounding area.

2. PATTERN OF PUBLIC AND PRIVATE ROADS, DRIVEWAYS, WALKWAYS AND PARKING FACILITIES.

See attached detailed plan set included in Appendix A. Plan sheet 3 shows the overall site plan, which illustrates existing and proposed driveways, fire lanes, parking lots, and loading docks. The proposed project will result in a total of 288 parking stalls on site, which exceeds the 275 stalls required per City zoning code for the 550 employees that will work here at Hoffmaster. The project also includes additional pavement in the southeast corner of the site to repurpose the existing parking lot to a proposed trailer parking area.

The site is bounded by Staff Sargeant Warren Hansen Drive to the east, 16th Street to the south, Industrial Avenue to the west, and Spring Street to the north. No additional public or private roads are proposed at this time. The existing streets provide adequate access to the site.

3. DETAILED LOT LAYOUT

See attached Certified Survey Map (CSM) included in Appendix B. Hoffmaster was originally located solely on Parcel #30 24 14 10 but also acquired Parcel #30 24 13 1 to make space for the proposed building addition. The attached CSM shows these two parcels being combined to accommodate the proposed building addition.

4. BUILDING DESCRIPTIONS

The proposed building addition will extend off the west end of the existing building on site. Included in Appendix A are the floor plans and elevations for the proposed building addition. As can be seen, the exterior materials for the proposed building addition will match the existing building to provide consistency throughout the development.

5. SANITARY SEWER AND WATER MAIN

The City of Clintonville's public sewer and water currently provide sewer and water service to the existing buildings on-site. An additional 2" water service and 4" sanitary sewer service off Industrial Avenue are proposed to feed the proposed building addition. The existing fire suppression system from the adjacent existing building will extend into the proposed addition to provide fire protection for the addition. The City's existing infrastructure is adequate to provide the needed sewer and water service for the site. See the attached plan set in Appendix A for details.

6. GRADING PLAN AND STORM DRAINAGE SYSTEM

The proposed project includes the construction of a new wet detention pond in the northwest corner of the site to provide the required storm water management for the proposed building addition and proposed parking lot expansion in this area. The proposed building addition will be constructed at the same first floor elevation as the existing building, and downspouts will be installed along the west building elevation and routed via storm sewer to the proposed pond.

In addition to the wet detention pond, a bio-retention pond will be constructed in the northeast corner of the site to treat storm water runoff from the proposed parking lot addition in that area of the site. The parking lot will be graded to drain to this proposed bio-retention pond.

The previous building addition in the site's southeast corner and a portion of the existing pavement in this area drains to and is treated by an existing storm water pond on the east side of Sargeant Warren Hansen Drive. This pond will remain in place and continue to provide the required treatment for that phase of the existing building and site. The original pavement and buildings on site, which pre-date storm water management requirements, drain off-site untreated by any of the proposed or existing storm water management features.

See the attached plan set in Appendix A for additional details.

7. LOCATION AND TREATMENT OF OPEN SPACE AND RECREATIONAL OR OTHER AMENITIES

There are no proposed recreational open spaces as part of this project. The purpose of the project is to expand the manufacturing capability of Hoffmaster, which will benefit the City by adding jobs in the area and increasing the City's tax revenue.

8. LOCATION AND DESCRIPTION OF AREAS TO BE DEDICATED TO THE PUBLIC

No additional road right of ways or other areas are proposed to be dedicated to the public. The proposed project area is already bound by public streets on all four sides.

9. LANDSCAPE PLAN AND PLANT LIST

Due to the manufacturing and heavy industrial nature of the site and surrounding area, a detailed landscape plan is not being proposed as part of the project.

10. PROOF OF FINANCIAL CAPABILITY

The proposed project will be 100% privately funded.

11. ANALYSIS OF ECONOMIC IMPACT UPON THE COMMUNITY

The proposed expansion represents a $65 million dollar investment by Hoffmaster into the City and the creation of over 100 jobs. In addition to providing the additional jobs and the economic

impact of these jobs within the City, the proposed building addition will provide increased property tax revenue for the City of Clintonville.

12. CONSTRUCTION SCHEDULE

See the proposed construction schedule included in Appendix C.

13. AGREEMENTS, BYLAWS, PROVISIONS, OR COVENENANTS

The proposed PUD is located fully on one private parcel, and there are no common services or common open areas to govern.

Appendix

A

Detailed Project Plans

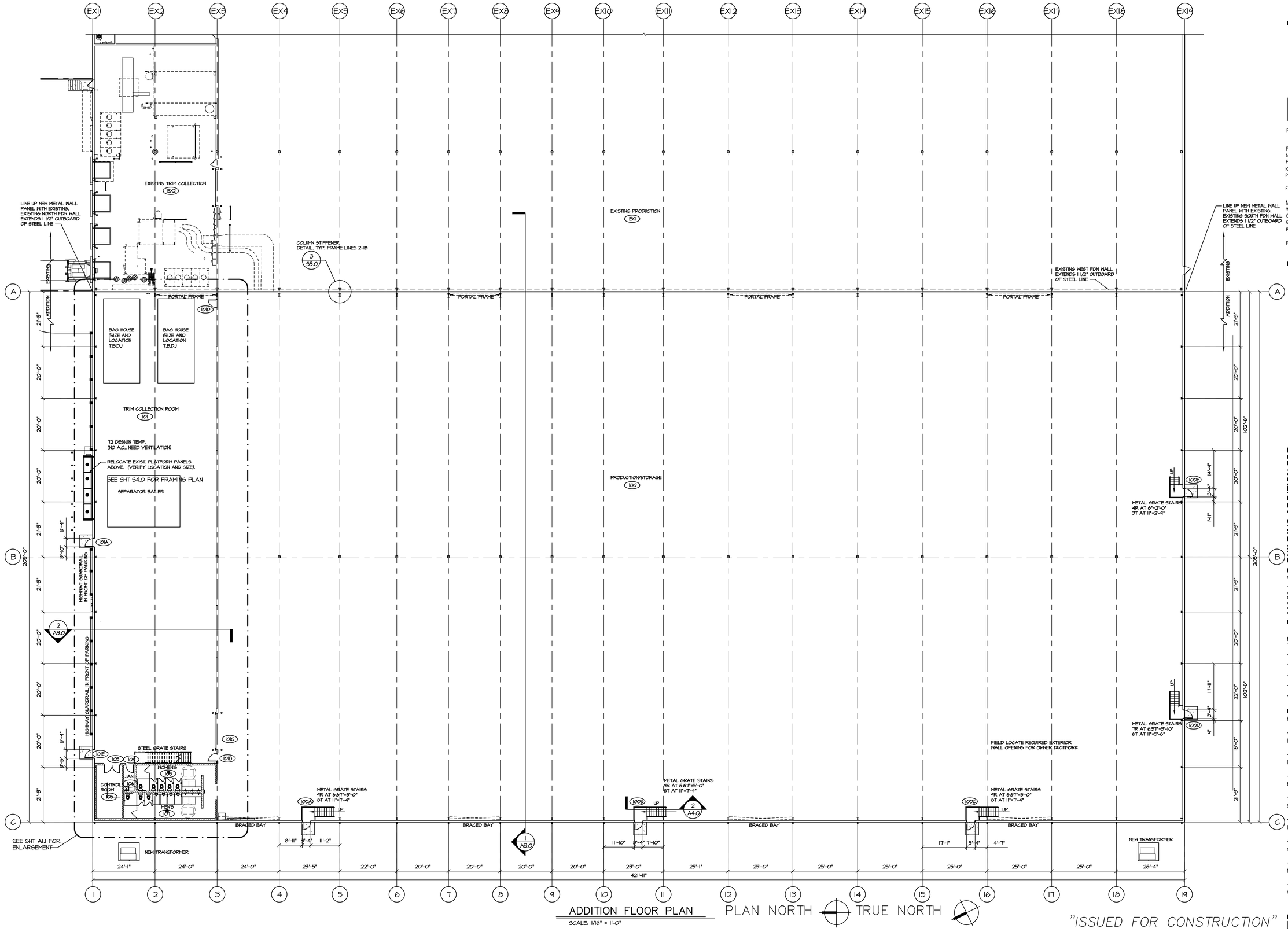

ADDITION FLOOR PLAN

SCALE: 1/16" = 1'-0"

PLAN NORTH

TRUE NORTH

"ISSUED FOR CONSTRUCTION"

Keller

PLANNERS | ARCHITECTS | BUILDERS

FOX CITIES
N216 State Road 55
P.O. Box 620
Kaukauna, WI 54130
PHONE (920) 766-5795/
1-800-236-2534
FAX (920) 766-5004

MADISON
711 Lois Dr.
Sun Prarie, WI 53590
PHONE (608) 318-2336
FAX (608) 318-2337

MILWAUKEE
W204 N11509
Goldendale Rd.
Germantown, WI 53022
PHONE (262) 250-9710
1-800-236-2534
FAX (262) 250-9740

WAUSAU
5605 Lilac Ave.
Wausau, WI 54401
PHONE (715) 849-3141
FAX (715) 849-3181

www.kellerbuilds.com

BUILDING ADDITION FOR:

HOFFMASTER/CREATIVE CONVERTING

255 SPRING STREET
CITY OF CLINTONVILLE,
WISCONSIN 54929

"COPYRIGHT NOTICE"
This design, drawing and detail is the copyrighted property of KELLER, INC. No part hereof shall be copied, duplicated, distributed, disclosed or made available to anyone without the expressed written consent of KELLER, INC.

REVISIONS
1 ---

PROJECT MANAGER: J. NOLL
DESIGNER: S. KLESSIG
DRAWN BY: HARRIS
EXPEDITOR: S. LAMON
SUPERVISOR: V. VALINSKAS
PRELIMINARY NO: ---
CONTRACT NO: 89045
DATE: 07-09-26
SHEET: A1.0
PROJECT NO.7998

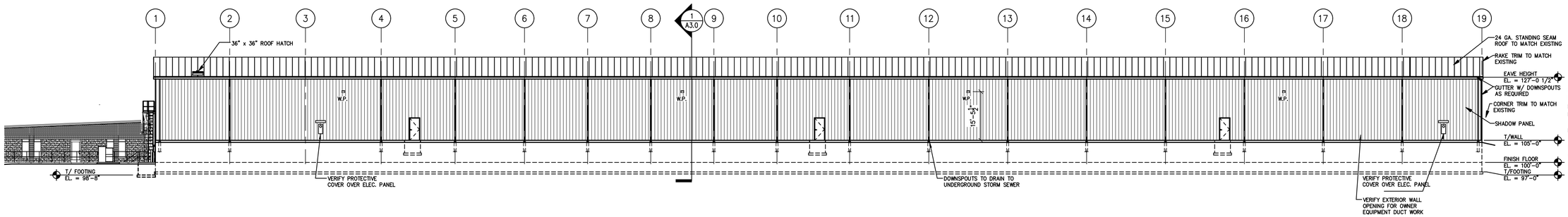

WEST ELEVATION

SCALE: 1/16" = 1'-0"

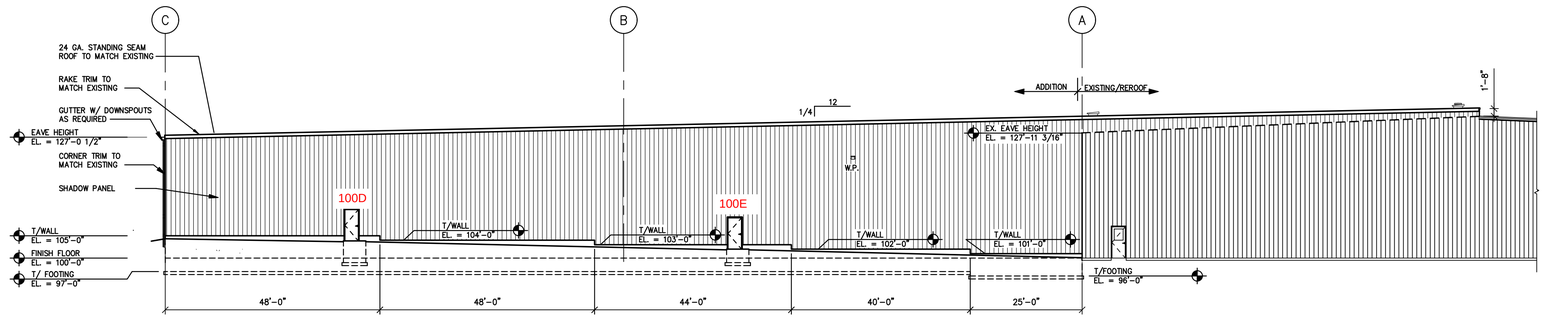

SOUTH ELEVATION

SCALE: 1/16" = 1'-0"

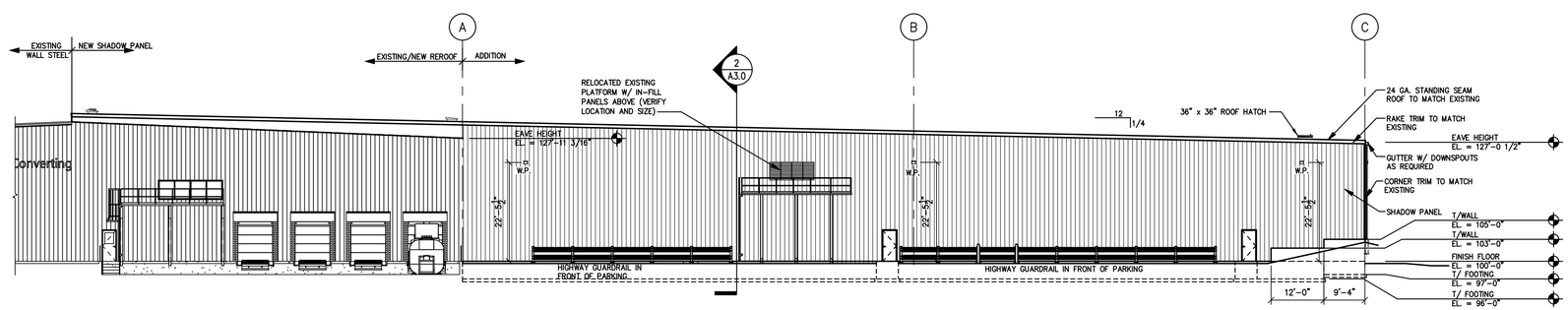

NORTH ELEVATION

SCALE: 1/16" = 1'-0"

"ISSUED FOR CONSTRUCTION"

PROJECT NO.7998

Keller
PLANNERS ARCHITECTS BUILDERS

FOX CITIES
N216 State Road 55
P.O. Box 620
Kaukauna, WI 54130
PHONE (920) 766-5795/
1-800-236-2534
FAX (920) 766-5004

MADISON
711 Lois Dr.
Sun Prarie, WI 53590
PHONE (608) 318-2336
FAX (608) 318-2337

MILWAUKEE
W204 N11509
Goldendale Rd.
Germantown, WI 53022
PHONE (262) 250-9710
1-800-236-2534
FAX (262) 250-9740

WAUSAU
5605 Lilac Ave.
Wausau, WI 54401
PHONE (715) 849-3141
FAX (715) 849-3181

www.kellerbuilds.com

BUILDING ADDITION FOR:
HOFFMASTER/CREATIVE CONVERTING
255 SPRING STREET
CITY OF CLINTONVILLE, WISCONSIN 54929

"COPYRIGHT NOTICE"
This design, drawing and detail is the copyrighted property of KELLER, INC. No part hereof shall be copied, duplicated, distributed, disclosed or made available to anyone without the expressed written consent of KELLER, INC.

REVISIONS
1 ---

PROJECT MANAGER: J. NOLL
DESIGNER: S. KLESSIG
DRAWN BY: HARRIS
EXPEDITOR: S. LAMON
SUPERVISOR: V. VALINSKAS
PRELIMINARY NO: ---
CONTRACT NO: 89095
DATE: 07-09-26
SHEET: A2.0

HOFFMASTER / CREATIVE CONVERTING BUILDING ADDITION
FOR KELLER, INC.
CITY OF CLINTONVILLE

WAUPACA COUNTY, WI

ATTENTION!
DOWNLOADED PLANS ARE NOT SCALEABLE, NEITHER THE OWNER OR THE ENGINEER SHALL BE HELD RESPONSIBLE FOR THE SCALE OR PRINT QUALITY OF DOWNLOADED PLANS. ONLY PRINTED PLANS FROM BLUE PRINT SERVICE CO., INC. SHALL BE CONSIDERED TO BE SCALEABLE PLANS.

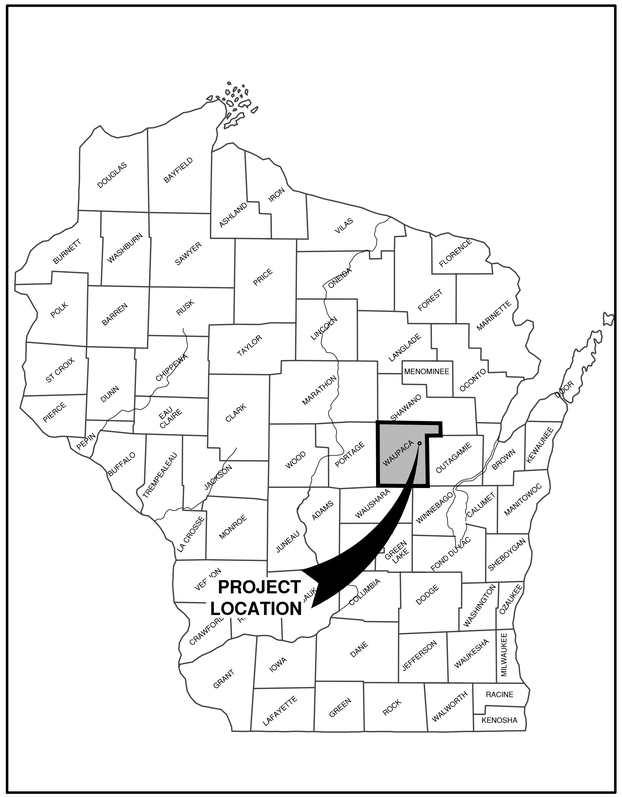

VICINITY MAP

NOTE:
EXISTING UTILITIES SHOWN ON PLANS ARE APPROXIMATE. THE CONTRACTOR SHALL BE RESPONSIBLE FOR OBTAINING EXACT LOCATIONS AND ELEVATIONS OF ALL UTILITIES, WHETHER SHOWN OR NOT, FROM THE OWNERS OF THE RESPECTIVE UTILITIES. ALL UTILITY OWNERS SHALL BE NOTIFIED FOR LOCATES BY THE CONTRACTOR 72 HOURS PRIOR TO EXCAVATION.

NOTE:
ALL EROSION CONTROL MEASURES SHALL BE IN PLACE PRIOR TO CONSTRUCTION AND SHALL CONFORM TO THE WISCONSIN DEPARTMENT OF NATURAL RESOURCES CONSTRUCTION SITE EROSION CONTROL AND TECHNICAL STANDARDS.

INDEX TO DRAWINGS

SHT. NO.	DESCRIPTION
C	LOCATION MAPS AND INDEX TO DRAWINGS
1	GENERAL NOTES
2	EXISTING SITE CONDITIONS
3	OVERALL SITE PLAN
4	SITE PLAN
5	UTILITY PLAN
6	GRADING PLAN
7	EROSION CONTROL PLAN
8	STORM SEWER EXTENSION PLAN
9	POND PLAN AND DETAILS
10	MISCELLANEOUS DETAILS
11	MISCELLANEOUS DETAILS
12	EROSION CONTROL - INLET PROTECTION TYPES A, B, C AND D
13	EROSION CONTROL - INLET PROTECTION TYPE D-HR AND TYPE D-M
14	EROSION CONTROL - DITCH CHECK DETAILS
15	EROSION CONTROL - SHEET FLOW DETAILS
16	EROSION CONTROL - TRACKOUT CONTROL PRACTICES
17	EROSION CONTROL - EROSION MAT SLOPE APPLICATION DETAILS
18	EROSION CONTROL - EROSION MAT CHANNEL APPLICATION DETAILS
19	EAST PARKING LOT SITE PLAN
20	SOUTH TRAILER PARKING SITE PLAN

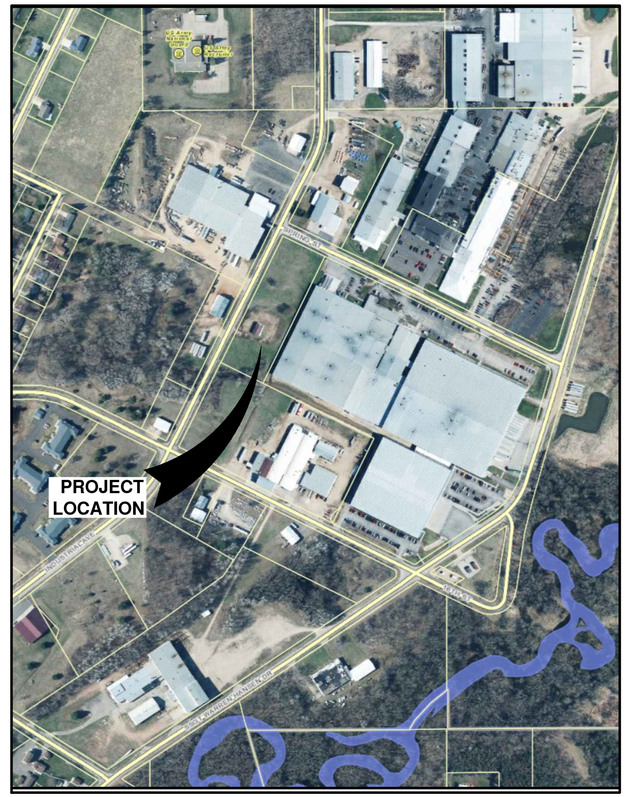

LOCATION MAP

NO.	DATE	APPROV.	REVISION	NO.	DATE	APPROV.	REVISION
1	6/16/2026	AJB	CITY SITE PLAN SUBMITTAL				
2	7/9/2026	AJB	CONSTRUCTION PLAN SET				

DRAWN GSG | CHECKED AJB | DESIGNED GSG

HOFFMASTER/CREATIVE CONVERTING BUILDING ADDITION
FOR KELLER, INC.
CITY OF CLINTONVILLE
WAUPACA COUNTY, WI

LOCATION MAPS AND INDEX TO DRAWINGS

DATE 01/2026 | FILE 2450043C | JOB NO. 2450043

Robert E. Lee & Associates, Inc.
1250 Centennial Centre Blvd | Hobart, WI | 920-662-9641 | releeinc.com

SHEET NO. C

File: R:\2400\2450\2450043\dwg\2450043C.dwg
Plot Date: Sep 22, 2026 - 1:41pm

OWNER INFORMATION:

CREATIVE CONVERTING
255 SPRING STREET
CLINTONVILLE, WI 54929

715-823-3104 EXT. 5211

CONTACT: CRAIG SORENSON

CONTRACTOR INFORMATION:

KELLER, INC
N126 STATE HIGHWAY 55
KAUKAUNA, WI 54130

920-766-5795

CONTACT: TONY PULLARA

UTILITY INFORMATION:

UTILITIES PRESENT:
CITY OF CLINTONVILLE WATER, SANITARY AND STORM SEWER, CHARTER COMMUNICATIONS, FRONTIER TELECOMMUNICATIONS, WE ENERGIES GAS AND ELECTRIC, AND ANR GAS.

UTILITIES SHOWN ON THIS MAP ARE BASED ON LOCATES FROM:

DIGGER'S HOTLINE TICKET NUMBERS 20260208688, 20260208692 , 20260208699 AND 20260208701 VISIBLE OBSERVATION (01/27/2026) AND RECORD UTILITY PLAN DOCUMENTS. UTILITY LINE LOCATIONS SHOULD BE VERIFIED PRIOR TO ANY DIGGING. THIS SITE MAY CONTAIN BURIED UTILITIES NOT IDENTIFIED ON THIS MAP.

DIGGERS HOTLINE = 1-800-242-8511

CHARTER COMMUNICATIONS CHC05
1228 12TH AVE S
ONALASKA, WI 54650

(262) 446-9821

WATER/SANITARY/STORM SEWER:
DEPARTMENT OF PUBLIC WORKS
CITY OF CLINTONVILLE
50 10TH STREET
CLINTONVILLE, WI 54929

(715) 823-7640

TELECOMMUNICATIONS:
FRONTIER COMMUNICATIONS CORP.
3 HIGH RIDGE PARK
STAMFORD CN 06905

(262) 446-9821

GAS & ELECTRIC:
WE ENERGIES
3060 VOYAGER DR.
GREEN BAY, WI 54311

(262) 446-9821

GAS:
ANR PIPELINE CO.
W3925 PIPELINE LANE
EDEN, WI 53019

(832) 320-5400

DIGGERS HOTLINE
Dial 811 or (800) 242-8511
www.DiggersHotline.com

TO OBTAIN LOCATION OF PARTICIPANTS UNDERGROUND FACILITIES BEFORE YOU DIG IN WISCONSIN

WIS. STATUTE 182.0175 (1974) REQUIRES MIN. OF 3 WORK DAYS NOTICE BEFORE YOU EXCAVATE.

LEGEND

- FIRE HYDRANT
- WATER VALVE
- CURB STOP
- WATER MANHOLE
- REDUCER/INCREASER
- SANITARY MANHOLE
- AIR RELIEF MANHOLE
- STORM MANHOLE
- STORM INLET (NOT IN CURB AND GUTTER)
- STORM INLET (IN CURB AND GUTTER)
- STORM INLET MANHOLE
- TANK COVER
- SOIL BORING
- POST
- IRON PIPE/ROD
- PK NAIL
- POWER POLE
- POWER POLE W/GUY WIRE
- LIGHT POLE
- TRAFFIC SIGNAL POLE
- ELECTRIC MANHOLE
- ELECTRIC METER
- TELEPHONE MANHOLE
- TELEPHONE PEDESTAL
- CABLE TV MANHOLE
- CABLE TV PEDESTAL
- GAS VALVE
- GAS METER
- MAILBOX
- SIGN
- BOLLARD
- DECIDUOUS TREE
- CONIFEROUS TREE
- BUSH
- RIP RAP
- CULVERT
- WETLANDS
- HANDICAP PARKING
- TO BE REMOVED
- TO BE DEMOLISHED
- EDGE OF ASPHALT
- EDGE OF GRAVEL
- CURB & GUTTER
- TREE/BRUSH LINE
- CONTOUR LINE
- RETAINING WALL
- GUARD RAIL
- FENCE
- SANITARY SEWER (SIZE NOTED)
- FORCEMAIN (SIZE NOTED)
- STORM SEWER (SIZE NOTED)
- WATERMAIN (SIZE NOTED)
- GAS LINE
- OVERHEAD TELEPHONE LINE
- UNDERGROUND TELEPHONE LINE
- OVERHEAD ELECTRIC LINE
- UNDERGROUND ELECTRIC LINE
- OVERHEAD CABLE TV LINE
- CABLE TV LINE
- FIBER OPTIC LINE
- R/W LINE
- PROPERTY LINE
- EASEMENT LINE
- BUILDING SETBACK LINE
- SECTION LINE

GR.	GRAVEL	WM	WATERMAIN	VPC	VERTICAL POINT OF CURVATURE	B-B	BACK TO BACK (OF CURB)
BIT.	BITUMINOUS	HYD.	HYDRANT	VPI	VERTICAL POINT OF INTERSECTION	F-F	FACE TO FACE (OF CURB)
ASPH	ASPHALT	WV	WATER VALVE	VPT	VERTICAL POINT OF TANGENCY	R/W	RIGHT OF WAY
CONC	CONCRETE	SAN	SANITARY SEWER	PC	POINT OF CURVATURE	T/C	TOP OF CURB
SW	SIDEWALK	MH	MANHOLE	PI	POINT OF INTERSECTION	F/L	FLOW LINE
BLDG	BUILDING	ST	STORM SEWER	PT	POINT OF TANGENCY	C/L	CENTERLINE
HSE	HOUSE	CB	CATCH BASIN	R	RADIUS	R/L	REFERENCE LINE
PED	PEDESTAL	TELE	TELEPHONE	EX	EXISTING	INV	INVERT
PP	POWER POLE	ELEC	ELECTRIC	PR	PROPOSED	CMP	CORRUGATED METAL PIPE
LP	LIGHT POLE	TV	TELEVISION	EOR	END OF RADIUS	RCP	REINFORCED CONCRETE PIPE
BM	BENCH MARK	STA.	STATION	BOC	BACK OF CURB	CULV	CULVERT

NO.	DATE	APPROV.	REVISION	NO.	DATE	APPROV.	REVISION
1	6/16/2026	AJB	CITY SITE PLAN SUBMITTAL				
2	7/9/2026	AJB	CONSTRUCTION PLAN SET				

DRAWN GSG
CHECKED AJB
DESIGNED GSG

HOFFMASTER/CREATIVE CONVERTING BUILDING ADDITION
FOR KELLER, INC.
CITY OF CLINTONVILLE
WAUPACA COUNTY, WI

GENERAL NOTES

DATE 01/2026
FILE 2450043T
JOB NO. 2450043

Robert E. Lee & Associates, Inc.
1250 Centennial Centre Blvd | Hobart, WI | 920-662-9641 | releeinc.com

SHEET NO. 1

File: K:\2450\2450\2450043\dwg\2450043t.dwg
Plot Date: Jul 09, 2026 - 9:26am
LAYOUT: GEN NOTES

BENCHMARK	BENCHMARK ESTABLISHED BY: ROBERT E. LEE & ASSOCIATES, INC. **FIELD VERIFY BENCHMARKS FOR ACCURACY.**	
NO.	DESCRIPTION	EL.
01	TAG BOLT ON HYDRANT	807.41
02	SMALL BOLT HEAD ON TOP OF HYDRANT	808.05
03	TAG BOLT ON HYDRANT	807.58
04	SMALL BOLT HEAD ON TOP OF HYDRANT	803.54

DEMOLITION NOTES

1. EXISTING ASPHALT AND BASE COURSE MAY BE PULVERIZED AND STOCKPILED ON SITE FOR FUTURE USE.
2. EXISTING GAS, ELECTRIC, CABLE TELEVISION AND TELEPHONE TO BE REMOVED AND/OR RELOCATED BY OTHERS. WORK SHALL BE COORDINATED BY GENERAL CONTRACTOR.
3. ALL MISCELLANEOUS STRUCTURES SHALL BE REMOVED.
4. DRIVEWAY OPENINGS SHALL BE REMOVED AND CURB OPENINGS SHALL BE CLOSED IN ACCORDANCE WITH MUNICIPAL STANDARDS.

NORTH

0' 40' 80'

SCALE IN FEET

NO.	DATE	APPROV.	REVISION	NO.	DATE	APPROV.	REVISION
1	6/16/2026	AJB	CITY SITE PLAN SUBMITTAL				
2	7/9/2026	AJB	CONSTRUCTION PLAN SET				

DRAWN GSG | CHECKED AJB | DESIGNED GSG

HOFFMASTER/CREATIVE CONVERTING BUILDING ADDITION
FOR KELLER, INC.
CITY OF CLINTONVILLE
WAUPACA COUNTY, WI

EXISTING SITE CONDITIONS

DATE 01/2026 | FILE 2450043T | JOB NO. 2450043

Robert E. Lee & Associates, Inc.
1250 Centennial Centre Blvd | Hobart, WI | 920-662-9641 | releeinc.com

SHEET NO. 2



LEGEND

- CONCRETE PAVEMENT (385 S.F.)
- ASPHALT PAVEMENT (LIGHT) (8,585 S.F.)
- LANDSCAPE AREA
- GREEN SPACE
- (12) INDICATES NUMBER OF PARKING STALLS

NOTE:
ALL DIMENSIONS ARE TO THE FACE OF CURB, UNLESS NOTED OTHERWISE

PARKING DATA

TOTAL PROPOSED PARKING STALLS PROVIDED = 288
PROPOSED HANDICAP STALLS PROVIDED = 9
TOTAL REQ'D PARKING STALLS = 1 SPACE/2 EMPLOYEES
=550 EMPLOYEES / 2 = 275 STALLS

SITE DATA

TOTAL AREA = 23.1 ACRES, 1,006,236 S.F.
BUILDING AREA = 14.15 ACRES, 616,402 S.F. (61.3%)
ASPHALT/GRAVEL/CONCRETE AREAS = 5.74 ACRES, 250,239 S.F. (24.8%)
GREEN SPACE = 3.21 ACRES, 139,595 S.F. (13.9%)

ZONING

I1 - INDUSTRIAL DISTRICT

PARCEL NO.

30 24 13 1 AND 30 24 14 10

NORTH

0' 70' 140'
SCALE IN FEET

NO.	DATE	APPROV.	REVISION	NO.	DATE	APPROV.	REVISION
1	6/16/2026	AJB	CITY SITE PLAN SUBMITTAL				
2	7/9/2026	AJB	CONSTRUCTION PLAN SET				

DRAWN GSG
CHECKED AJB
DESIGNED GSG

HOFFMASTER/CREATIVE CONVERTING BUILDING ADDITION
FOR KELLER, INC.
CITY OF CLINTONVILLE
WAUPACA COUNTY, WI

OVERALL SITE PLAN

DATE 01/2026
FILE 2450043D
JOB NO. 2450043

REL Robert E. Lee & Associates, Inc.
1250 Centennial Centre Blvd | Hobart, WI | 920-662-9641 | releeinc.com

SHEET NO. 3

File: R:\2400\2450\2450043\dwg\2450043D.dwg
Plot Date: Sep 22, 2026 - 1:19pm
LAYOUT: OVERALL

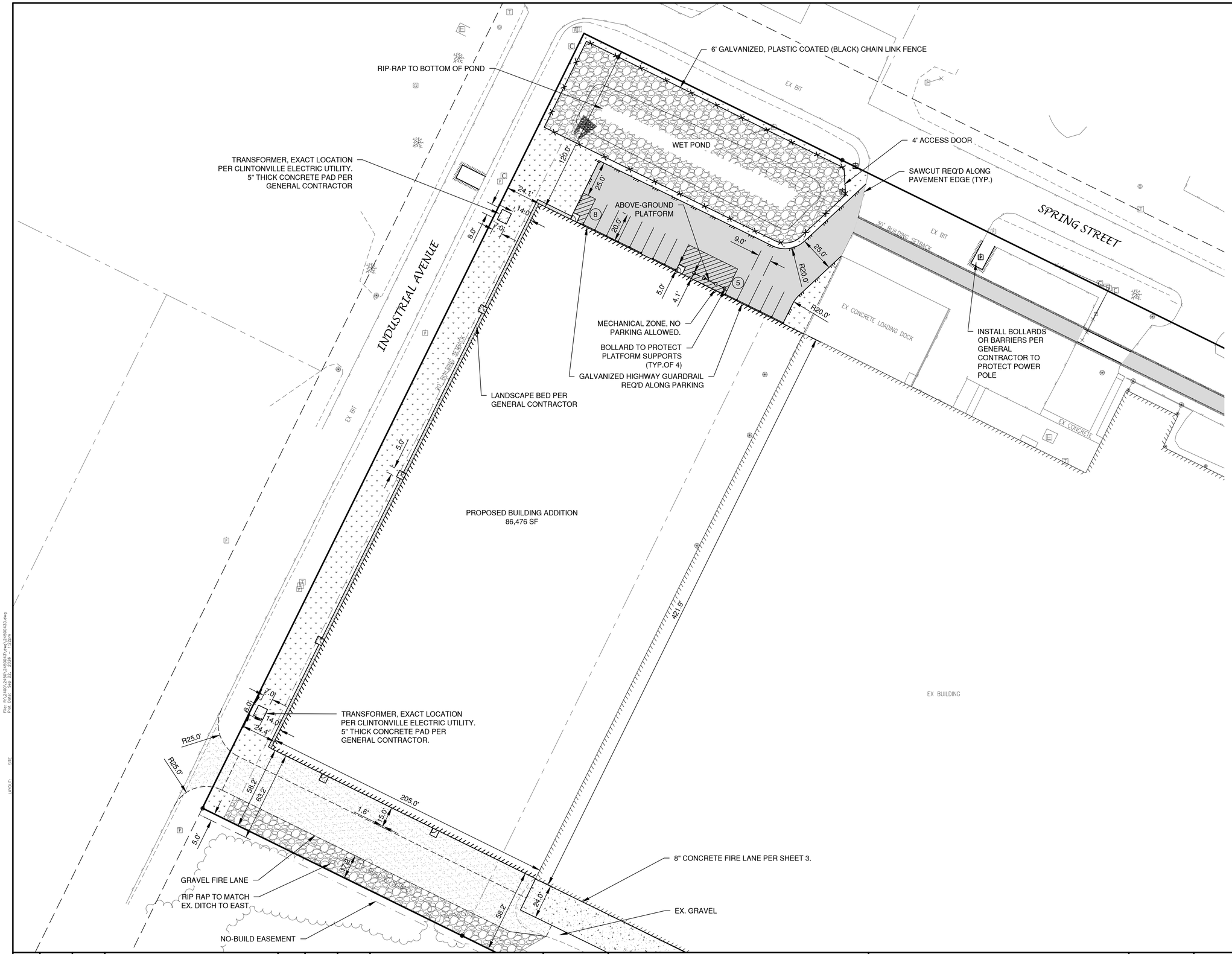

NO.	DATE	APPROV.	REVISION
1	6/16/2026	AJB	CITY SITE PLAN SUBMITTAL
2	7/9/2026	AJB	CONSTRUCTION PLAN SET

DRAWN GSG
CHECKED AJB
DESIGNED GSG

HOFFMASTER/CREATIVE CONVERTING BUILDING ADDITION
FOR KELLER, INC.
CITY OF CLINTONVILLE
WAUPACA COUNTY, WI

SITE PLAN

DATE 01/2026
FILE 2450043D
JOB NO. 2450043

Robert E. Lee & Associates, Inc.
1250 Centennial Centre Blvd | Hobart, WI | 920-662-9641 | releeinc.com

SHEET NO. 4

File: R:\2400\2450\2450043\dwg\2450043D.dwg
Plot Date: Sep 22, 2026 - 1:22pm
LAYOUT: SITE

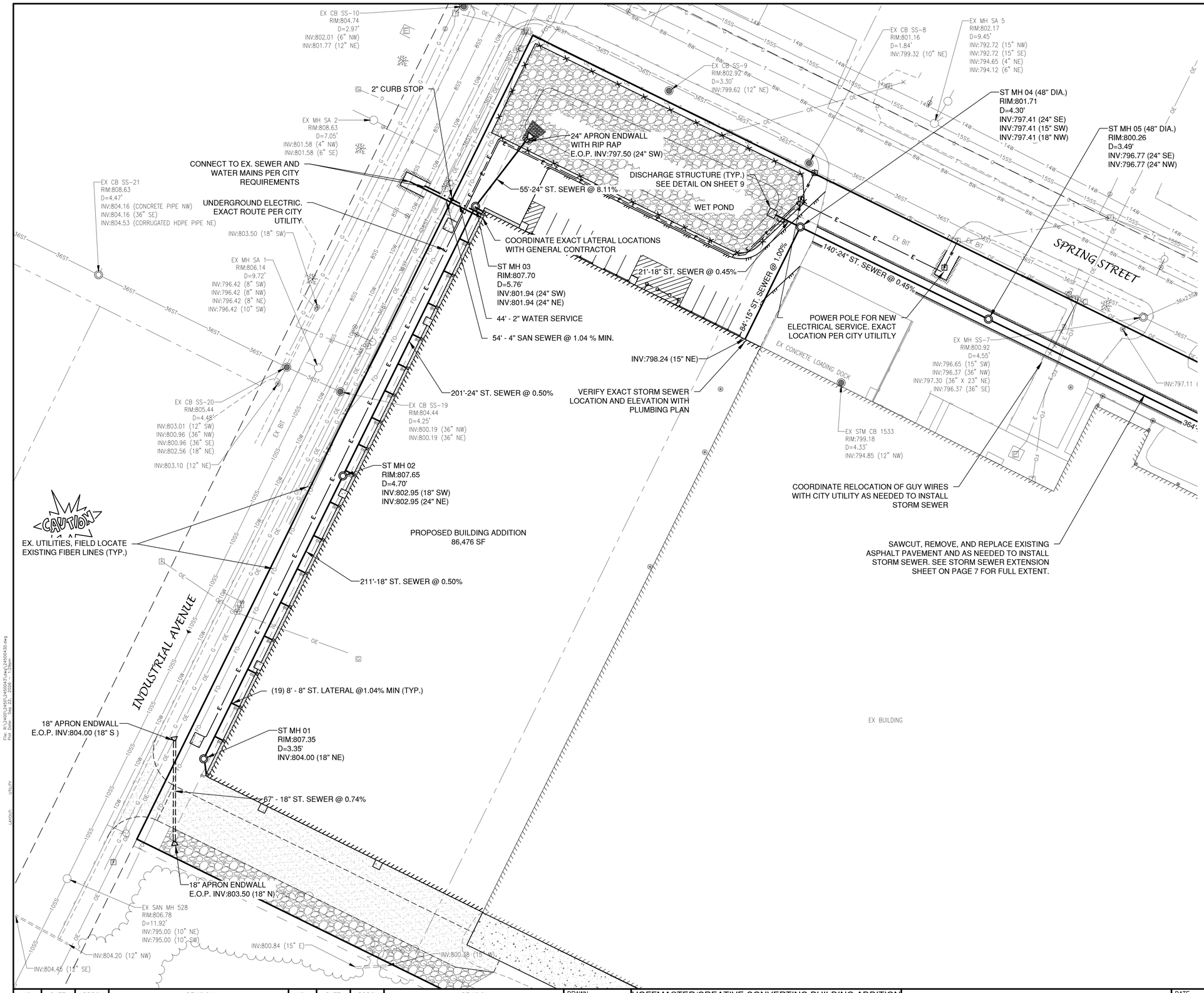

LEGEND

- PROPOSED SANITARY SEWER
- 8SS — 8SS — EXISTING SANITARY SEWER (SIZE NOTED)
- PROPOSED STORM SEWER
- 10ST — 10ST — EXISTING STORM SEWER (SIZE NOTED)
- PROPOSED WATERMAIN
- 6W — 6W — 6W — EXISTING WATERMAIN (SIZE NOTED)

PROPOSED	EXISTING	
		FIRE HYDRANT
		WATER VALVE
		CURB STOP
		WATER MANHOLE
		REDUCER/INCREASER
		SANITARY MANHOLE
		LIFT STATION
		TRACER WIRE SIGNAL CONNECTION BOX
		CLEANOUT
		STORM MANHOLE
		STORM INLET (NOT IN CURB AND GUTTER)
		STORM INLET (IN CURB AND GUTTER)
		STORM INLET MANHOLE
		YARD DRAIN
		STANDPIPE
		ROOF DOWNSPOUT
		DISCHARGE STRUCTURE

NOTE

1. A MINIMUM OF 6.5 FEET OF COVER SHALL BE MAINTAINED OVER ALL WATERMAIN.
2. SANITARY SEWER, WATERMAIN AND STORM SEWER SHALL BE CONSTRUCTED IN ACCORDANCE WITH THE CURRENT STANDARD SPECIFICATIONS FOR SEWER AND WATER CONSTRUCTION IN WISCONSIN AND ADMINISTRATIVE CODE CHAPTERS SPS 381-387.
3. FIELD VERIFY LOCATION OF EXISTING UTILITIES. IF EXISTING LOCATIONS DIFFER FROM WHAT IS INDICATED ON THE PLANS, **CONTACT ENGINEER,** PRIOR TO CONTINUED WORK.
4. ALL SANITARY SEWER, STORM SEWER AND WATER SERVICES / MAINS SHALL BE PROVIDED WITH TRACER WIRE OR OTHER METHOD TO BE LOCATED.
5. EXISTING GAS, ELECTRIC, CABLE TELEVISION AND TELEPHONE TO BE REMOVED AND/OR RELOCATED BY OTHERS. WORK SHALL BE COORDINATED BY GENERAL CONTRACTOR.

NORTH

0' 30' 60'

SCALE IN FEET

NO.	DATE	APPROV.	REVISION	NO.	DATE	APPROV.	REVISION
1	6/16/2026	AJB	CITY SITE PLAN SUBMITTAL				
2	7/9/2026	AJB	CONSTRUCTION PLAN SET				

DRAWN GSG
CHECKED AJB
DESIGNED GSG

HOFFMASTER/CREATIVE CONVERTING BUILDING ADDITION
FOR KELLER, INC.
CITY OF CLINTONVILLE
WAUPACA COUNTY, WI

UTILITY PLAN

DATE 01.2026
FILE 2450043D
JOB NO. 2450043

Robert E. Lee & Associates, Inc.
1250 Centennial Centre Blvd | Hobart, WI | 920-662-9641 | releeinc.com

SHEET NO. 5

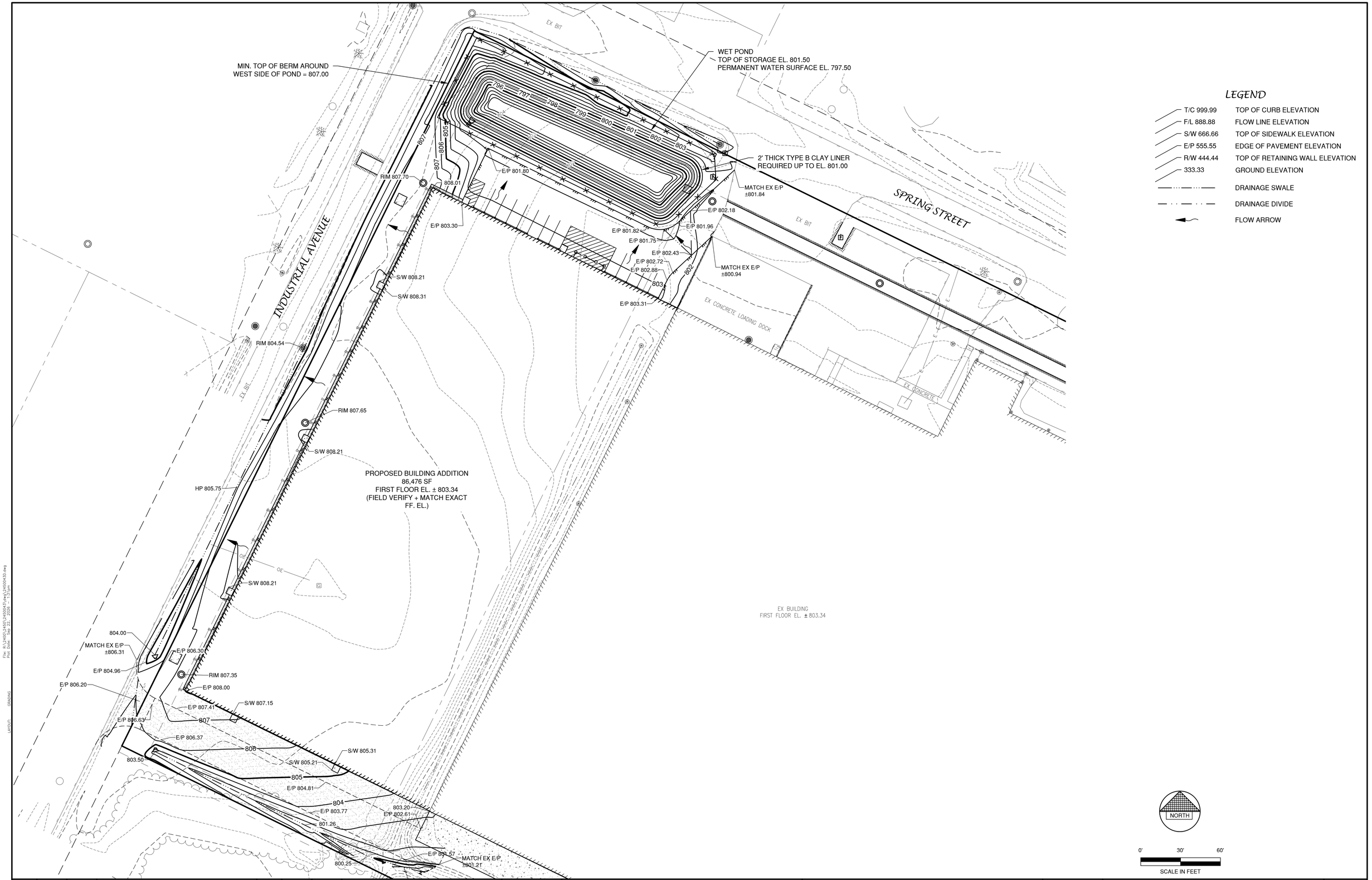

File: R:\2450\2450143\dwg\2450043D.dwg
Plot Date: Sep 22, 2026 - 1:37pm

GRADING

LAYOUT

NO.	DATE	APPROV.	REVISION	NO.	DATE	APPROV.	REVISION
1	6/16/2026	AJB	CITY SITE PLAN SUBMITTAL				
2	7/9/2026	AJB	CONSTRUCTION PLAN SET				

DRAWN GSG
CHECKED AJB
DESIGNED GSG

HOFFMASTER/CREATIVE CONVERTING BUILDING ADDITION
FOR KELLER, INC.
CITY OF CLINTONVILLE
WAUPACA COUNTY, WI

GRADING PLAN

DATE 01/2026
FILE 2450043D
JOB NO. 2450043

Robert E. Lee & Associates, Inc.
1250 Centennial Centre Blvd | Hobart, WI | 920-662-9641 | releeinc.com

SHEET NO. 6

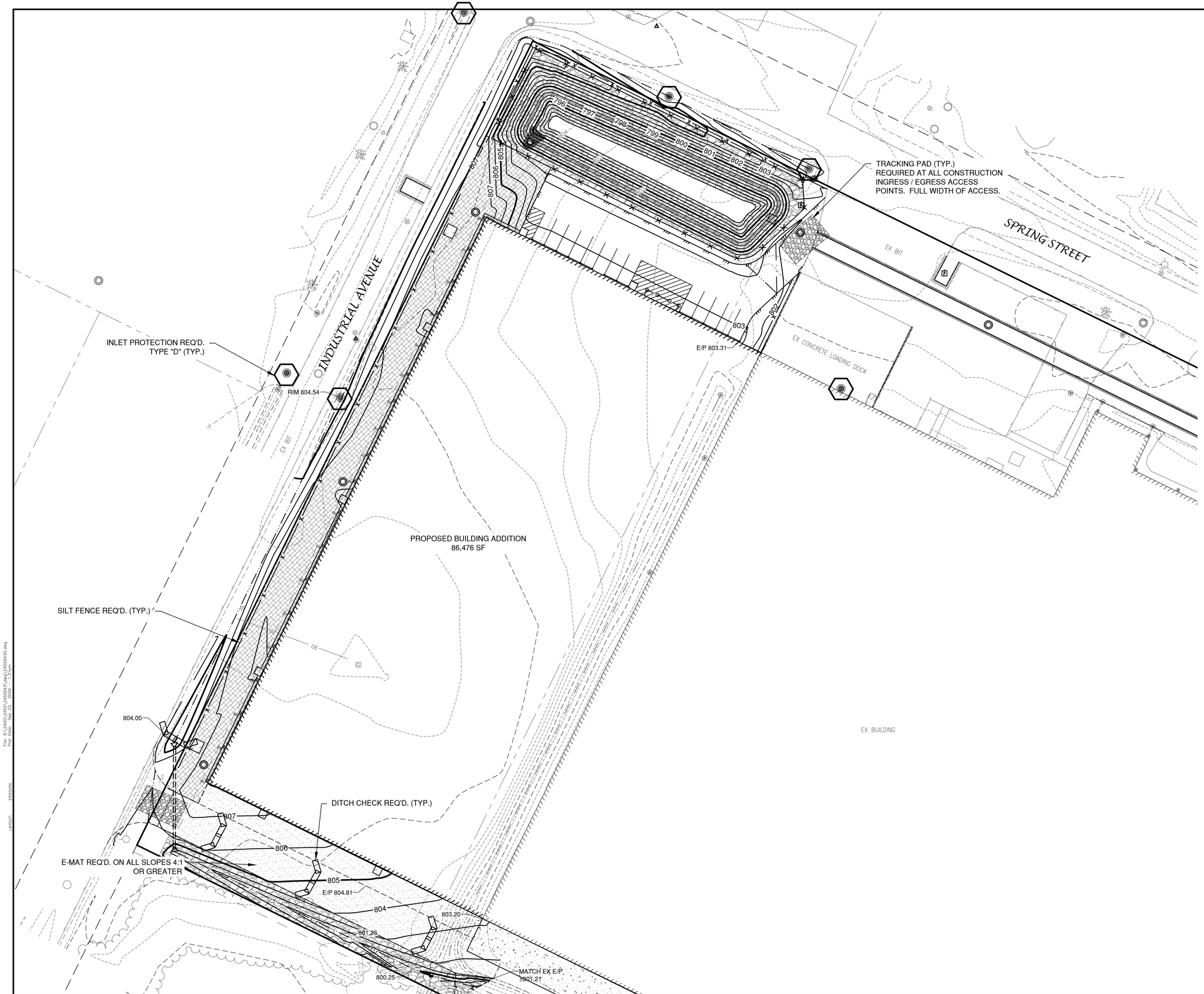

LEGEND

- DRAINAGE SWALE
- DRAINAGE DIVIDE
- FLOW ARROW
- SILT FENCE (PER WDNR TECHNICAL STANDARD 1056)
- DITCH CHECK (PER WDNR TECHNICAL STANDARD 1062)
- TRACKING PAD (PER WDNR TECHNICAL STANDARD 1057)
- EROSION MAT (PER WDNR TECHNICAL STANDARD 1053)
- INLET PROTECTION (PER WDNR TECHNICAL STANDARD 1060)

EROSION CONTROL

ALL EROSION CONTROL PRACTICES INDICATED ON THIS PLAN ARE APPROXIMATE LOCATIONS ONLY. THE ACTUAL SITE MAY REQUIRE MORE OR LESS EROSION CONTROL DEPENDING ON THE CURRENT CONDITION OF THE SITE.

1. SILT FENCE IS REQUIRED DOWNSLOPE OF ANY DISTURBED LAND THAT MAY CARRY SEDIMENTS OFF SITE.
2. A TRACKING PAD IS REQUIRED AT ANY INGRESS/EGRESS LOCATION, WHERE SEDIMENT MAY BE TRACKED OFF-SITE.
3. PROPER INLET PROTECTION SHALL BE USED DEPENDING ON THE INLET TYPE.
4. ALL NECESSARY SITE DEWATERING SHALL BE PERFORMED IN ACCORDANCE WITH WDNR TECHNICAL STANDARD 1061.

NORTH

0' 30' 60'

SCALE IN FEET

NO.	DATE	APPROV.	REVISION
1	6/16/2026	AJB	CITY SITE PLAN SUBMITTAL
2	7/9/2026	AJB	CONSTRUCTION PLAN SET

NO.	DATE	APPROV.	REVISION

DRAWN GSG
CHECKED AJB
DESIGNED GSG

HOFFMASTER/CREATIVE CONVERTING BUILDING ADDITION
FOR KELLER, INC.
CITY OF CLINTONVILLE
WAUPACA COUNTY, WI

EROSION CONTROL PLAN

DATE 01/2026
FILE 2450043D
JOB NO. 2450043

Robert E. Lee & Associates, Inc.
1250 Centennial Centre Blvd | Hobart, WI | 920-662-9641 | releeinc.com

SHEET NO. 7

File: R:\2400\2450\2450043\dwg\2450043D.dwg
Plot Date: Sep 23, 2026 - 1:31pm
EROSION
LAYOUT

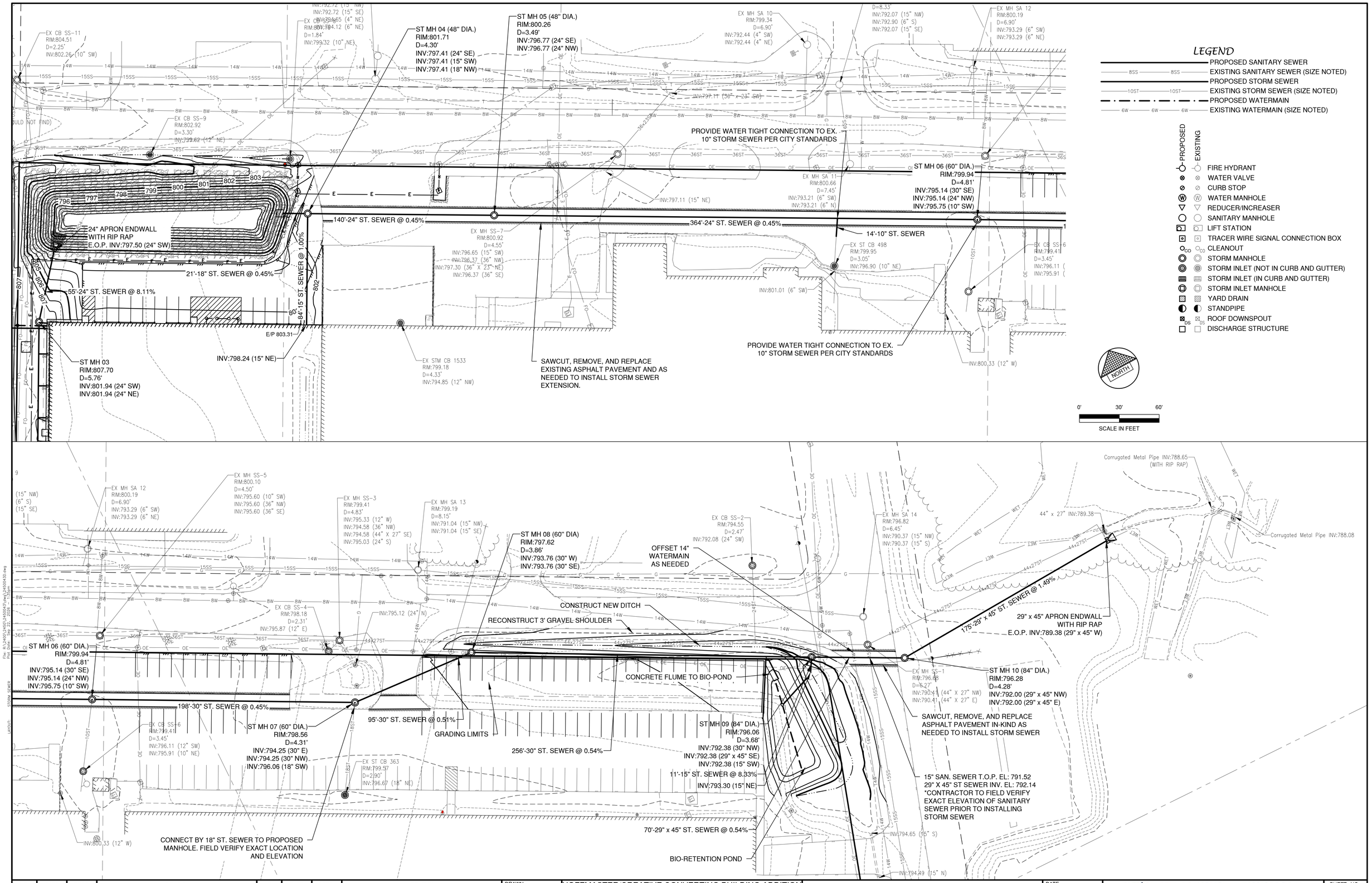

NO.	DATE	APPROV.	REVISION	NO.	DATE	APPROV.	REVISION
1	6/16/2026	AJB	CITY SITE PLAN SUBMITTAL				
2	7/9/2026	AJB	CONSTRUCTION PLAN SET				

DRAWN GSG
CHECKED AJB
DESIGNED GSG

HOFFMASTER/CREATIVE CONVERTING BUILDING ADDITION
FOR KELLER, INC.
CITY OF CLINTONVILLE
WAUPACA COUNTY, WI

STORM SEWER EXTENSION PLAN

DATE 01/2026
FILE 2450043D
JOB NO. 2450043

Robert E. Lee & Associates, Inc.
1250 Centennial Centre Blvd | Hobart, WI | 920-662-9641 | releeinc.com

SHEET NO. 8

POND FLOOD ELEVATION SUMMARY

YEAR STORM	PEAK WATER SURFACE ELEVATION
1-YEAR	799.05
2-YEAR	799.27
10-YEAR	799.84
100-YEAR	800.48

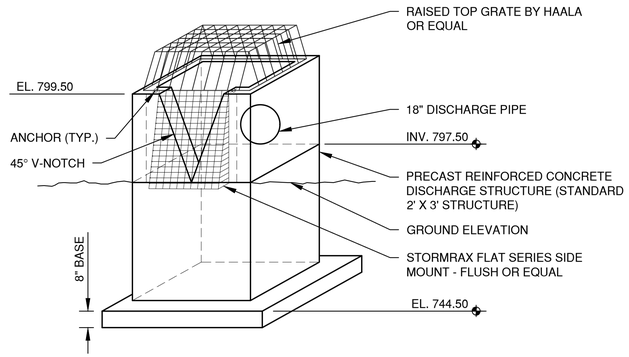

REINFORCED CONCRETE
DISCHARGE STRUCTURE DETAIL (NTS.)

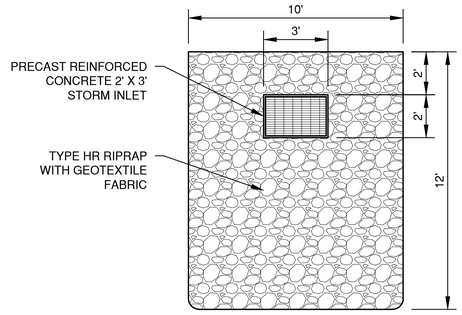

REINFORCED CONCRETE
DISCHARGE STRUCTURE DETAIL

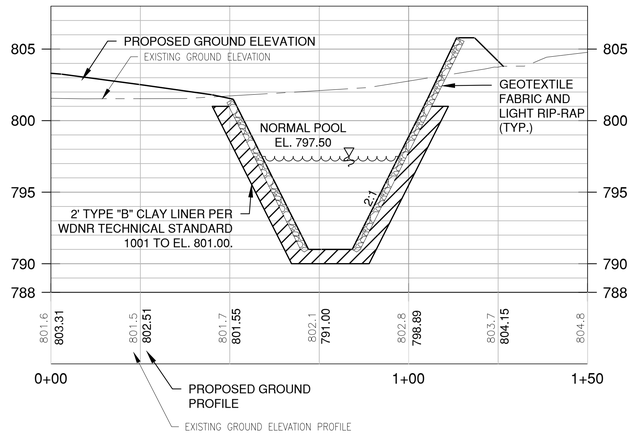

SECTION A-A₁
HORIZ. SCALE: 1" = 20'
VERT. SCALE: 1" = 5'

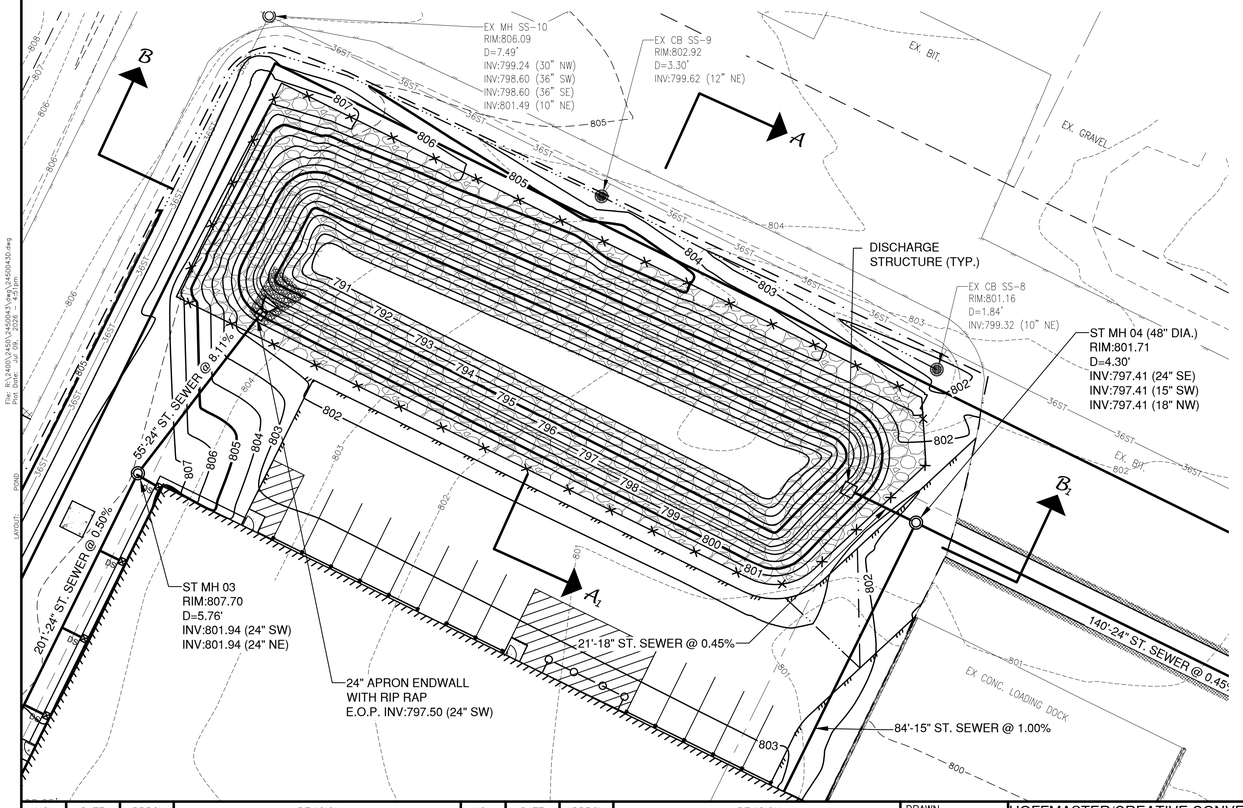

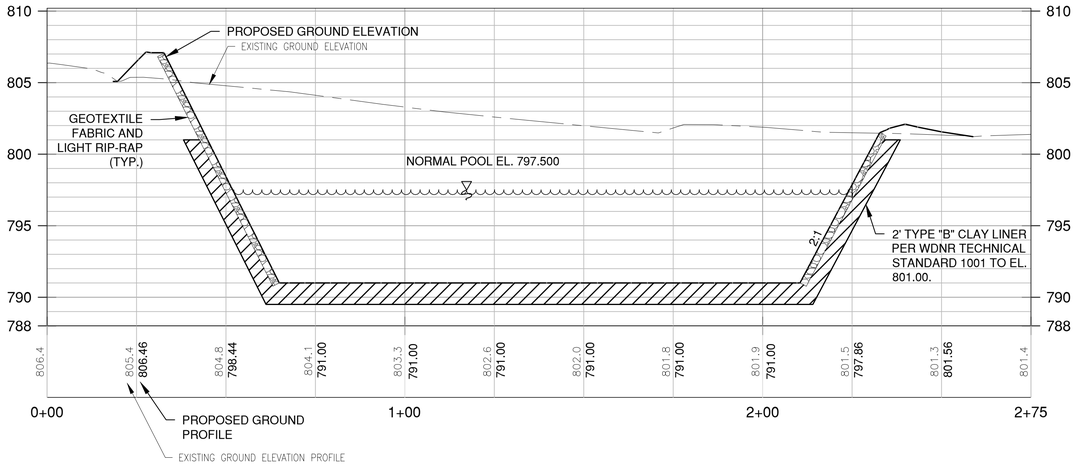

SECTION B-B₁
HORIZ. SCALE: 1" = 20'
VERT. SCALE: 1" = 5'

NO.	DATE	APPROV.	REVISION	NO.	DATE	APPROV.	REVISION
1	6/16/2026	AJB	CITY SITE PLAN SUBMITTAL				
2	7/9/2026	AJB	CONSTRUCTION PLAN SET				

DRAWN GSG
CHECKED AJB
DESIGNED GSG

HOFFMASTER/CREATIVE CONVERTING BUILDING ADDITION
FOR KELLER, INC.
CITY OF CLINTONVILLE
WAUPACA COUNTY, WI

POND PLAN AND DETAILS

DATE 01/2026
FILE 2450043D
JOB NO. 2450043

Robert E. Lee & Associates, Inc.
1250 Centennial Centre Blvd | Hobart, WI | 920-662-9641 | releeinc.com

SHEET NO. 9

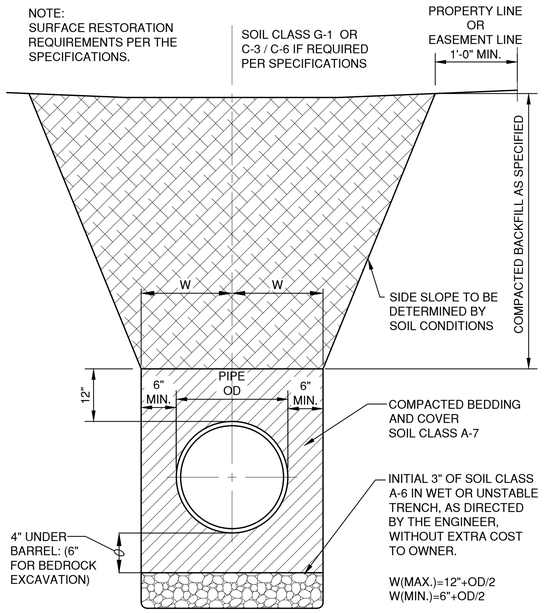

HDPE /PVC SEWER, WATERMAIN AND FORCEMAIN BEDDING AND TRENCH DETAIL

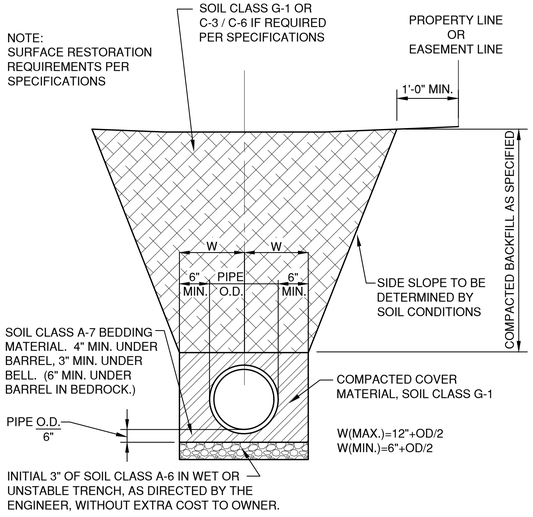

CONCRETE PIPE BEDDING AND TRENCH DETAIL

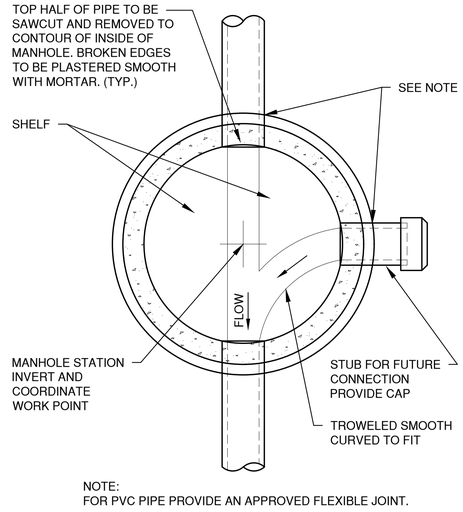

MANHOLE BASE PLAN
8" - 60" (INCLUSIVE)

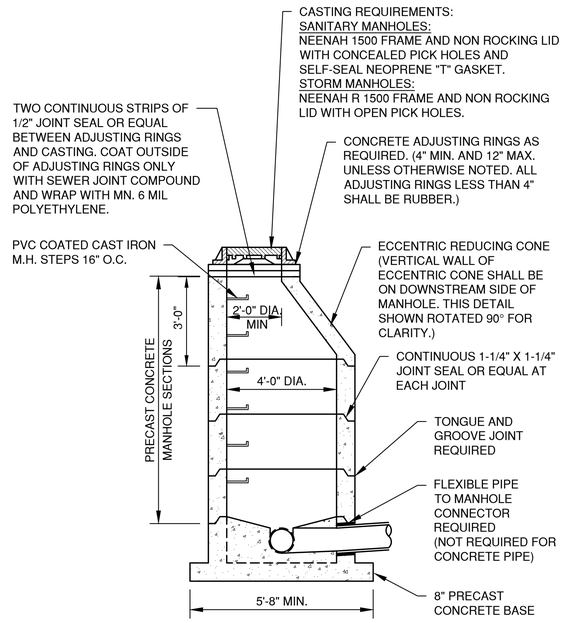

SANITARY AND STORM STANDARD MANHOLE
8"-24" (INCLUSIVE)

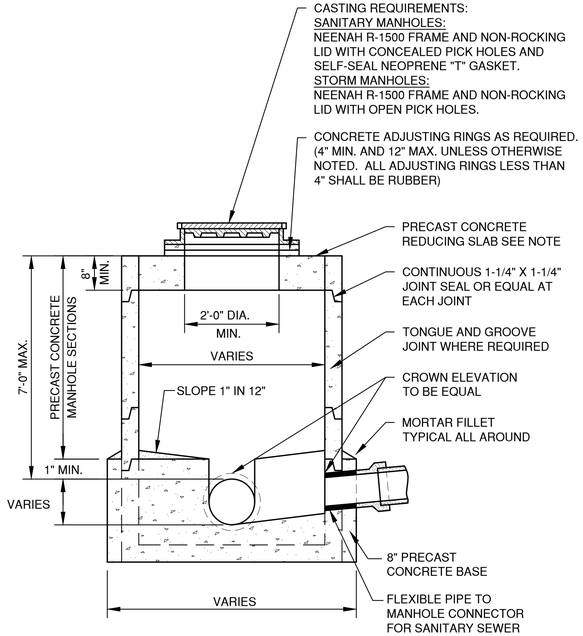

FLAT COVER MANHOLE

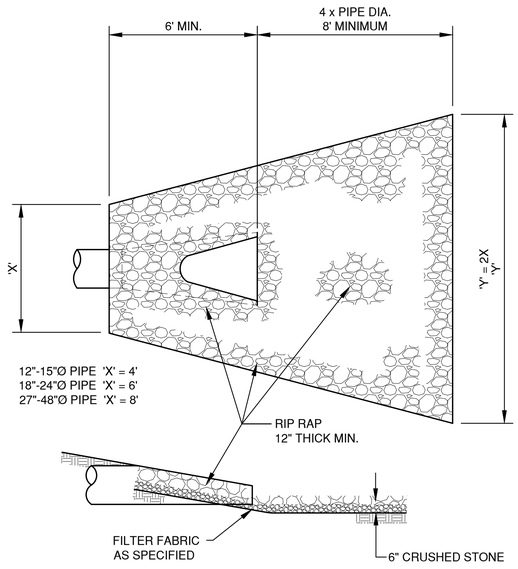

ENDWALL RIP RAP DETAIL

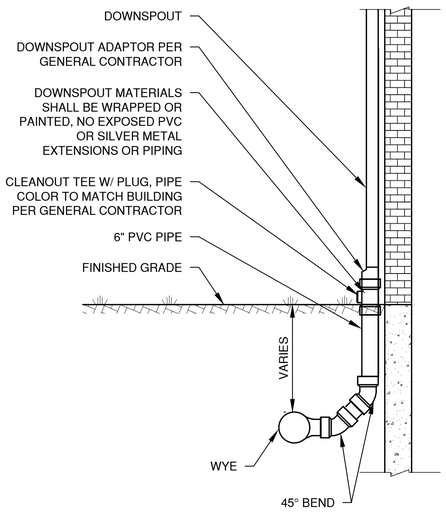

DOWN SPOUT COLLECTOR DETAIL

NO.	DATE	APPROV.	REVISION	NO.	DATE	APPROV.	REVISION
1	7/9/2026	AJB	CONSTRUCTION PLAN SET				

DRAWN GSG
CHECKED AJB
DESIGNED GSG

HOFFMASTER/CREATIVE CONVERTING BUILDING ADDITION
FOR KELLER, INC.
CITY OF CLINTONVILLE
WAUPACA COUNTY WISCONSIN

MISCELLANEOUS DETAILS

DATE 01/2026
FILE 2450043 DET
JOB NO. 2450043

Robert E. Lee & Associates, Inc.
1250 Centennial Centre Blvd | Hobart, WI | 920-662-9641 | releeinc.com

SHEET NO. 10

File: R:\2450\2450\2450043\dwg\2450043 DET.dwg
Plot Date: Jul 09, 2026 - 9:33am
Layout: DETAILS (1)

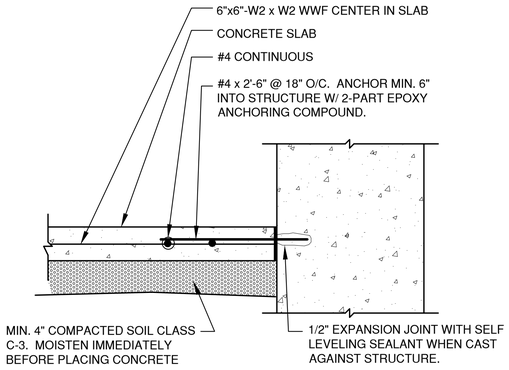

TYPICAL SIDEWALK ADJACENT TO STRUCTURE

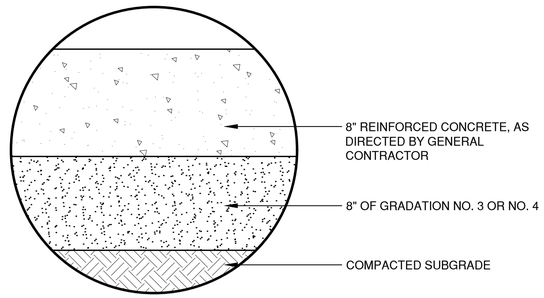

CONCRETE PAVEMENT

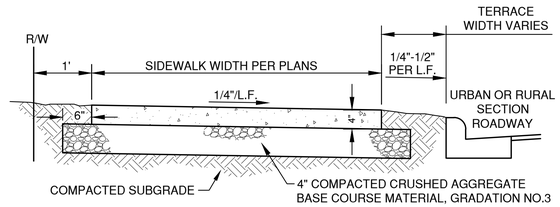

TYPICAL SECTION

NOTE:
REFER TO SPECIFICATIONS
FOR REINFORCEMENTS.

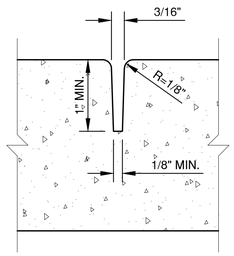

TOOLED CONTRACTION JOINT

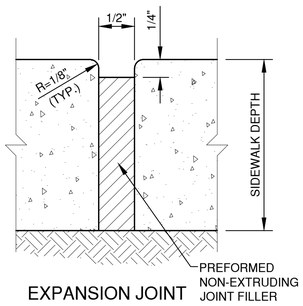

EXPANSION JOINT

WALK WIDTH	CONTRACTION JOINT SPACING		EXPANSION JOINT SPACING
	TRANSVERSE	LONGITUDINAL	
4'	4'	NOT REQ'D	100' MAX.
5'	5'	NOT REQ'D.	100' MAX.
6'	6'	NOT REQ'D.	100' MAX.
8'	4'	4'	100' MAX.
10'	5'	5'	100' MAX.
12'	6'	6'	100' MAX.

SIDEWALK DETAIL



LIGHT DUTY ASPHALT PAVEMENT

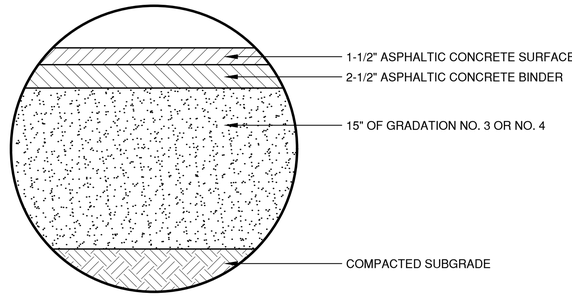

HEAVY DUTY ASPHALT PAVEMENT

NO.	DATE	APPROV.	REVISION	NO.	DATE	APPROV.	REVISION
1	7/9/2026	AJB	CONSTRUCTION PLAN SET				

DRAWN GSG
CHECKED AJB
DESIGNED GSG

HOFFMASTER/CREATIVE CONVERTING BUILDING ADDITION
FOR KELLER, INC.
CITY OF CLINTONVILLE
WAUPACA COUNTY WISCONSIN

MISCELLANEOUS DETAILS

DATE 01/2026
FILE 2450043 DET
JOB NO. 2450043

Robert E. Lee & Associates, Inc.
1250 Centennial Centre Blvd | Hobart, WI | 920-662-9641 | releeinc.com

SHEET NO. 11

File: R:\2400\2450\2450043\dwg\2450043 DET.dwg
Plot Style: Jul 09, 2026 - 4:49pm
Layout: DETAILS (2)

INLET PROTECTION NOTES:

INLET PROTECTION DEVICES SHALL BE IN ACCORDANCE WITH WDNR TECHNICAL STANDARD 1060, STORM DRAIN INLET PROTECTION FOR CONSTRUCTION SITES.

MANUFACTURED ALTERNATIVES APPROVED AND LISTED ON THE WDOT PRODUCT ACCEPTABILITY LIST MAY BE SUBSTITUTED.

WHEN REMOVING OR MAINTAINING INLET PROTECTION, CARE SHALL BE TAKEN SO THAT THE SEDIMENT TRAPPED ON THE GEOTEXTILE FABRIC DOES NOT FALL INTO THE INLET. ANY MATERIAL FALLING INTO THE INLET SHALL BE REMOVED IMMEDIATELY.

MAINTENANCE NOTES:

WHEN REMOVING OR MAINTAINING INLET PROTECTION, CARE SHALL BE TAKEN SO THAT THE SEDIMENT TRAPPED IN THE FABRIC DOES NOT FALL INTO THE STRUCTURE. MATERIAL THAT HAS FALLEN INTO THE INLET SHALL BE IMMEDIATELY REMOVED.

INSTALLATION NOTES: TYPE "B" AND "C"

TRIM EXCESS FABRIC IN THE FLOW LINE TO WITHIN 3" OF THE GRATE.

DEMONSTRATE A METHOD OF MAINTENANCE, USING A SEWN FLAP, HAND HOLDS OR OTHER METHOD TO PREVENT ACCUMULATED SEDIMENT FROM ENTERING THE INLET.

TYPE "D"

DO NOT INSTALL INLET PROTECTION TYPE D IN INLETS SHALLOWER THAN 30" MEASURED FROM THE BOTTOM OF THE INLET TO THE TOP OF THE GRATE.

TRIM EXCESS FABRIC IN THE FLOW LINE TO WITHIN 3" OF THE GRATE.

THE INSTALLED BAG SHALL HAVE A MINIMUM SIDE CLEARANCE, BETWEEN THE INLET WALLS AND THE BAG, MEASURED AT THE BOTTOM OF THE OVERFLOW HOLES, OF 3". WHERE NECESSARY, CINCH THE BAG, USING PLASTIC ZIP TIES, TO ACHIEVE THE 3" CLEARANCE, THE TIES SHALL BE PLACED AT THE MAXIMUM OF 4" FROM THE BOTTOM OF THE BAG.

NOTES:

1. TAPER BOTTOM OF BAG TO MAINTAIN THREE INCHES OF CLEARANCE BETWEEN THE BAG AND THE STRUCTURE, MEASURED FROM THE BOTTOM OF THE OVERFLOW OPENINGS TO THE STRUCTURE WALL.
2. GEOTEXTILE FABRIC TYPE FF FOR FLAPS, TOP AND BOTTOM OF THE OUTSIDE OF FILTER BAG. FRONT, BACK AND BOTTOM OF FILTER BAG BEING ONE PIECE.
3. FRONT LIFTING FLAP IS TO BE USED WHEN REMOVING AND MAINTAINING FILTER BAG.
4. SIDE FLAPS SHALL BE A MAXIMUM OF TWO INCHES LONG. FOLD THE FABRIC OVER AND REINFORCE WITH MULTIPLE STITCHES.
5. FLAP POCKETS SHALL BE LARGE ENOUGH TO ACCEPT WOOD 2" X 4". THE REBAR, STEEL PIPE, OR WOOD SHALL BE INSTALLED IN THE REAR FLAP AND SHALL NOT BLOCK THE TOP HALF OF THE CURB FACE OPENING.

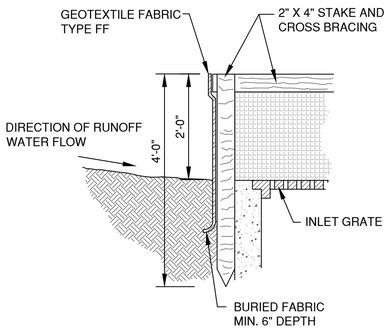

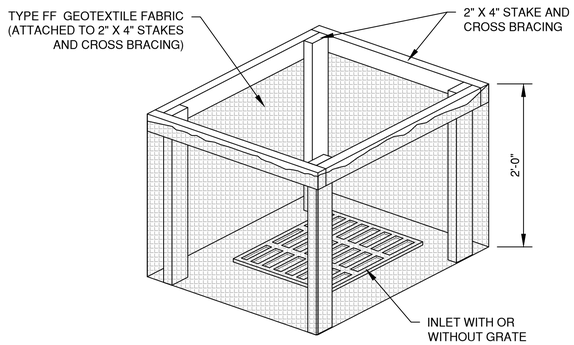

INLET PROTECTION, TYPE A

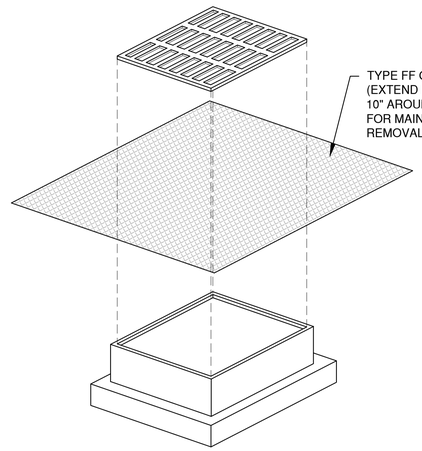

INLET PROTECTION, TYPE B
(WITHOUT CURB BOX)
(CAN BE INSTALLED IN ANY INLET WITHOUT A CURB BOX)

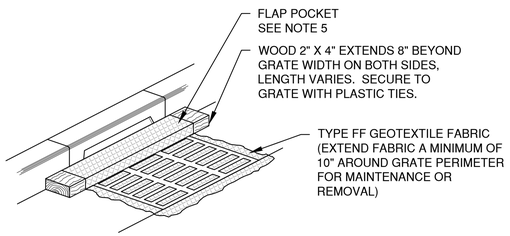

INLET PROTECTION, TYPE C
(WITH CURB BOX)

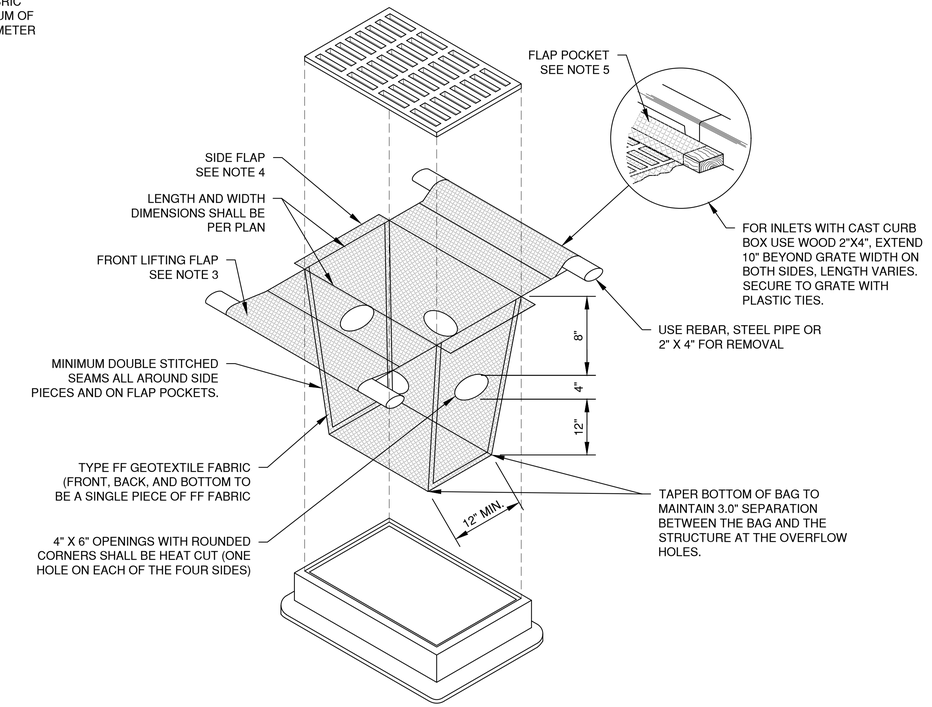

INLET PROTECTION, TYPE D
(CAN BE INSTALLED IN INLETS WITH OR WITHOUT CURB BOXES)

File: C:\Wis2021\Sms\Temp\Acrobat\...16280\2450043_EC.dwg
Print Date: Jul 09, 2026 - 9:53am
LAYOUT: I_INLET PROTECTION

NO.	DATE	APPROV.	REVISION	NO.	DATE	APPROV.	REVISION
1	7/9/2026	AJB	CONSTRUCTION PLAN SET				

DRAWN GSG | CHECKED AJB | DESIGNED GSG

HOFFMASTER/CREATIVE CONVERTING BUILDING ADDITION
FOR KELLER, INC.
CITY OF CLINTONVILLE
WAUPACA COUNTY, WI

EROSION CONTROL
INLET PROTECTION TYPES A, B, C AND D

DATE 01/2026 | FILE 2450043_EC | JOB NO. 2450043

Robert E. Lee & Associates, Inc.
1250 Centennial Centre Blvd | Hobart, WI | 920-662-9641 | releeinc.com

SHEET NO. 12

NOTES:

1. TAPER BOTTOM OF BAG TO MAINTAIN THREE INCHES OF CLEARANCE BETWEEN THE BAG AND THE STRUCTURE, MEASURED FROM THE BOTTOM OF THE OVERFLOW OPENINGS TO THE STRUCTURE WALL.
2. GEOTEXTILE FABRIC TYPE FF FOR FLAPS AND TOP HALF OF FILTER BAG. GEOTEXTILE FABRIC TYPE HR FOR BOTTOM HALF OF FILTER BAG. FRONT, BACK AND BOTTOM OF FILTER BAG BEING ONE PIECE.
3. FRONT LIFTING FLAP IS TO BE USED WHEN REMOVING AND MAINTAINING FILTER BAG.
4. SIDE FLAPS SHALL BE A MAXIMUM OF TWO INCHES LONG. FOLD THE FABRIC OVER AND REINFORCE WITH MULTIPLE STITCHES.
5. FLAP POCKETS SHALL BE LARGE ENOUGH TO ACCEPT WOOD 2" X 4". THE REBAR, STEEL PIPE, OR WOOD SHALL BE INSTALLED IN THE REAR FLAP AND SHALL NOT BLOCK THE TOP HALF OF THE CURB FACE OPENING.

MAINTENANCE NOTES:

WHEN REMOVING OR MAINTAINING INLET PROTECTION, CARE SHALL BE TAKEN SO THAT THE SEDIMENT TRAPPED IN THE FABRIC DOES NOT FALL INTO THE STRUCTURE. MATERIAL THAT HAS FALLEN INTO THE INLET SHALL BE IMMEDIATELY REMOVED.

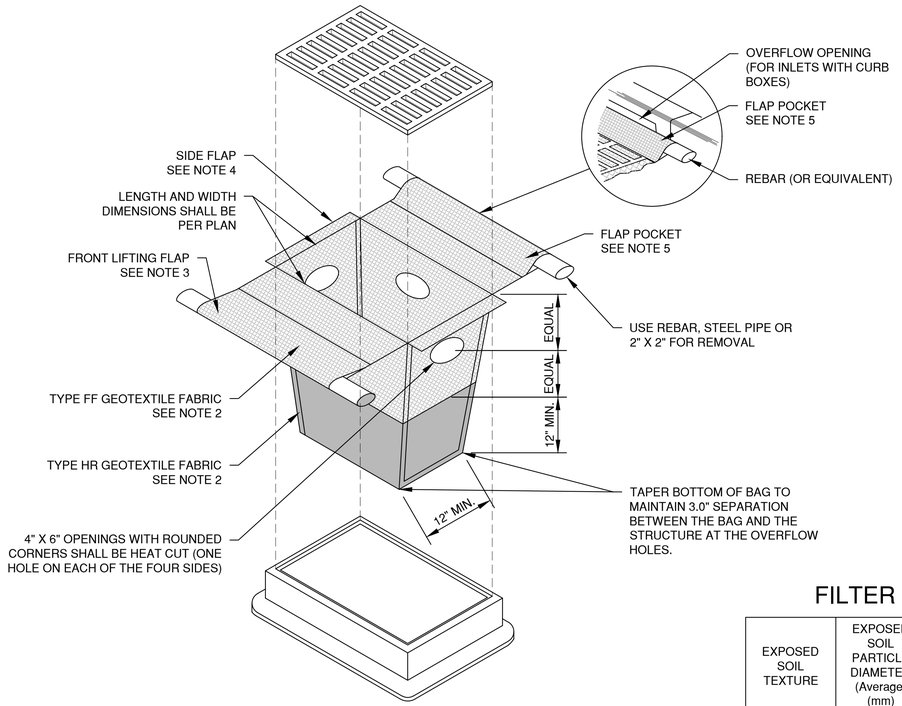

INLET PROTECTION, TYPE D-HR

(CAN BE INSTALLED IN INLETS WITH OR WITHOUT CURB BOXES)

NOTES:

1. TAPER BOTTOM OF BAG TO MAINTAIN THREE INCHES OF CLEARANCE BETWEEN THE BAG AND THE STRUCTURE, MEASURED FROM THE BOTTOM OF THE OVERFLOW OPENINGS TO THE STRUCTURE WALL.
2. GEOTEXTILE FABRIC TYPE FF FOR FLAPS, TOP AND BOTTOM OF OUTSIDE OF FILTER BAG. FRONT, BACK AND BOTTOM OF FILTER BAG BEING ONE PIECE.
3. FRONT LIFTING FLAP IS TO BE USED WHEN REMOVING AND MAINTAINING FILTER BAG.
4. SIDE FLAPS SHALL BE A MAXIMUM OF TWO INCHES LONG. FOLD THE FABRIC OVER AND REINFORCE WITH MULTIPLE STITCHES.
5. FLAP POCKETS SHALL BE LARGE ENOUGH TO ACCEPT WOOD 2" X 4". THE REBAR, STEEL PIPE, OR WOOD SHALL BE INSTALLED IN THE REAR FLAP AND SHALL NOT BLOCK THE TOP HALF OF THE CURB FACE OPENING.

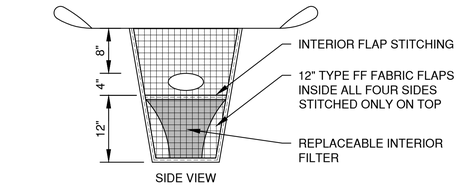

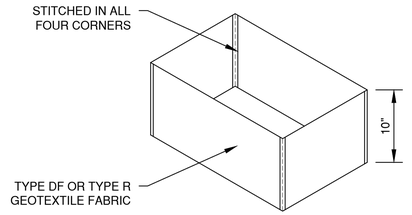

REPLACEABLE INTERIOR FILTER

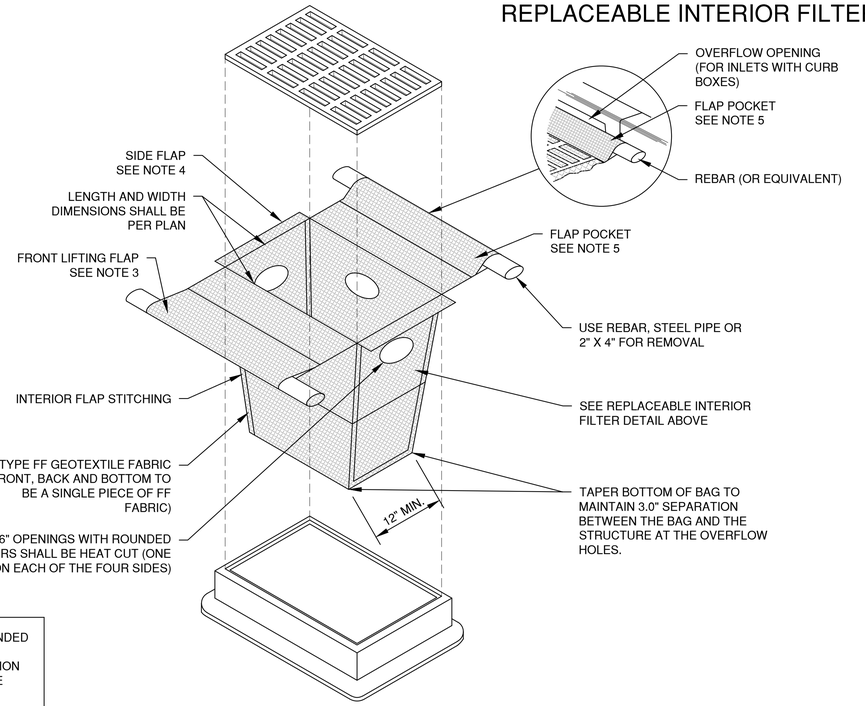

INLET PROTECTION, TYPE D-M

(CAN BE INSTALLED IN INLETS WITH OR WITHOUT CURB BOXES)

FILTER FABRIC TYPE

EXPOSED SOIL TEXTURE	EXPOSED SOIL PARTICLE DIAMETER (Average) (mm)	FILTER FABRIC TYPE*	RECOMMENDED INLET PROTECTION DEVICE TYPE
COARSE (SAND)	≥0.0625	FF	D, D-M
MEDIUM (SILT LOAM)	0.0624 - 0.005	DF	D, D-M
FINE (CLAY)	≤ 0.004	R	D-M
		HR	D-HR

* DF, R OR HR FILTERS MAY BE USED WHERE FF IS THE REQUIRED MINIMUM STANDARD. R OR HR MAY BE USED WHERE DF IS THE REQUIRED MINIMUM STANDARD.

** FOLLOW DESIGN CRITERIA OF WDNR TECHNICAL STANDARD 1060

NO.	DATE	APPROV.	REVISION
1	7/9/2026	AJB	CONSTRUCTION PLAN SET

DRAWN GSG
CHECKED AJB
DESIGNED GSG

HOFFMASTER/CREATIVE CONVERTING BUILDING ADDITION
FOR KELLER, INC.
CITY OF CLINTONVILLE
WAUPACA COUNTY, WI

EROSION CONTROL
INLET PROTECTION
TYPE D-HR AND TYPE D-M

DATE 01/2026
FILE 2450043_EC
JOB NO. 2450043

Robert E. Lee & Associates, Inc.
1250 Centennial Centre Blvd | Hobart, WI | 920-662-9641 | releeinc.com

SHEET NO. 13

File: C:\WisDOT\Temp\AcPublish_16280\2450043_EC.dwg
Plot Date: Jul 09, 2026 - 9:16am
LAYOUT: 2 INLET PROTECTION

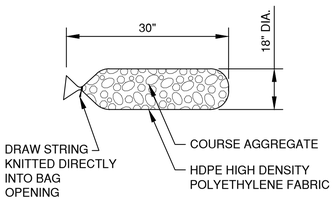

FILTER BAG DETAIL

NOTES:

1. 18" X 30" ROCK FILLED FILTER BAG SHALL BE COMPRISED OF THE FOLLOWING:

   HDPE HIGH DENSITY POLYETHYLENE
   HDPE HIGH DENSITY POLYETHYLENE DRAW STRING KNITTED DIRECTLY INTO BAG OPENING.
   80% FABRIC CLOSURE WITH APPARENT OPENING SIZE NO LARGER THAN 1/8 " X 1/8"
   ROLLED SEAM USING A MINIMUM OF 480 DENIER POLYESTER SEWING YARN FOR STRENGTH AND DURABILITY.

2. USE WELL GRADED COURSE AGGREGATE CONFORMING TO THE FOLLOWING GRADATION REQUIREMENTS

SIEVE SIZE	SIZE NO. AASHTO No. 67 (1)
2 INCH (50 mm)	-
1 1/2 INCH (37.5mm)	-
1 INCH (25.0 mm)	100
3/4 INCH (19.0mm)	90-100
3/8 INCH (9.5mm)	20-55
No. 4 (4.75mm)	0-10
No. 8 (2.36mm)	0-5

(1) SIZE No. ACCORDING TO AASHTO M 43

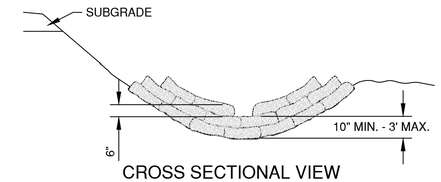

CROSS SECTIONAL VIEW

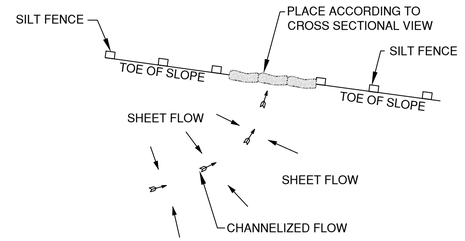

PLAN VIEW

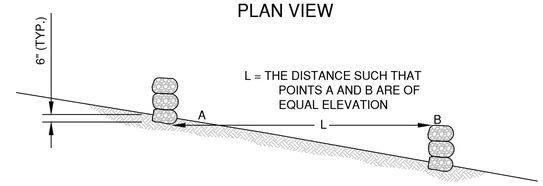

SIDE VIEW

DITCH CHECK DETAIL

ROCK FILLED EROSION CONTROL BAGS

DITCH CHECK GENERAL NOTES:

1. DITCH CHECKS SHALL BE CONSTRUCTED IN ACCORDANCE WITH WDNR TECHNICAL STANDARD 1062.
2. AT A MINIMUM, INSTALL ONE DITCH CHECK FOR EVERY 2 FEET OF VERTICAL DROP.
3. DITCH CHECKS SHALL BE PLACED SUCH THAT THE RESULTING PONDING WILL NOT CAUSE AN INCONVENIENCE OR DAMAGE TO ADJACENT AREAS.

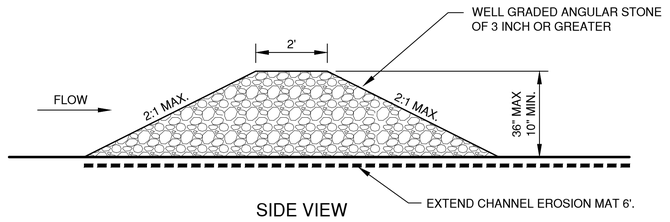

SIDE VIEW

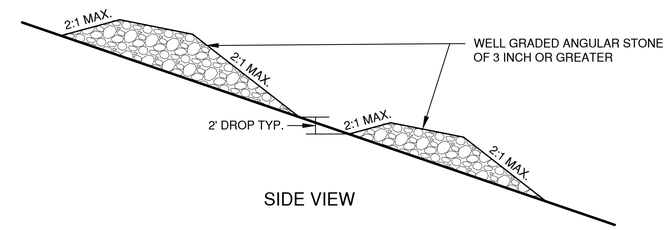

SIDE VIEW

TEMPORARY DITCH CHECK USING STONE

NO.	DATE	APPROV.	REVISION	NO.	DATE	APPROV.	REVISION
1	7/9/2026	AJB	CONSTRUCTION PLAN SET				

DRAWN GSG
CHECKED AJB
DESIGNED GSG

HOFFMASTER/CREATIVE CONVERTING BUILDING ADDITION
FOR KELLER, INC.
CITY OF CLINTONVILLE
WAUPACA COUNTY, WI

EROSION CONTROL
DITCH CHECK DETAILS

DATE 01/2026
FILE 2450043_EC
JOB NO. 2450043

Robert E. Lee & Associates, Inc.
1250 Centennial Centre Blvd | Hobart, WI | 920-662-9641 | releeinc.com

SHEET NO. 14

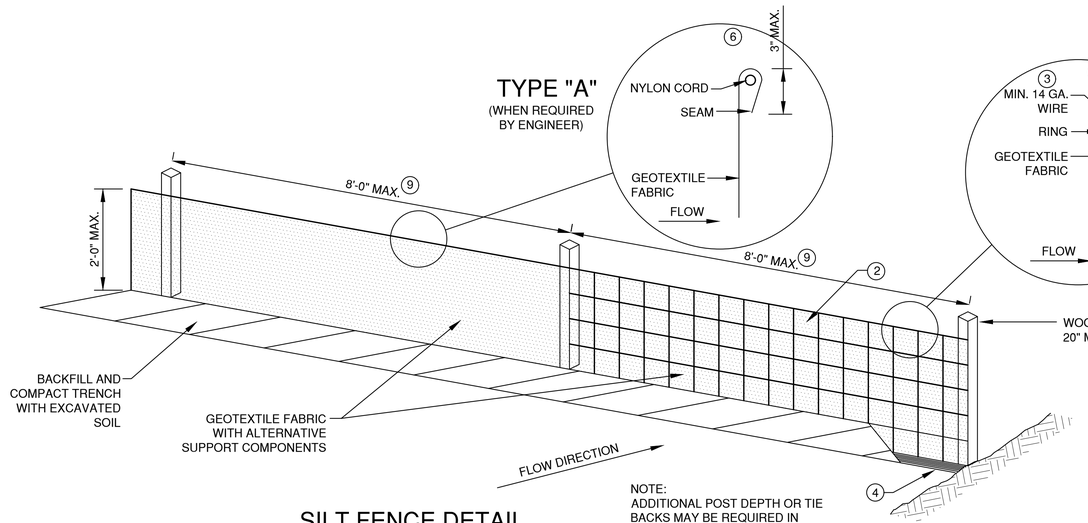

SILT FENCE DETAIL

NOTE:
ADDITIONAL POST DEPTH OR TIE BACKS MAY BE REQUIRED IN UNSTABLE SOILS.

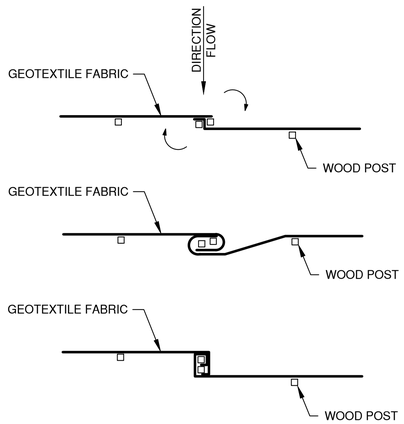

TWIST METHOD 8

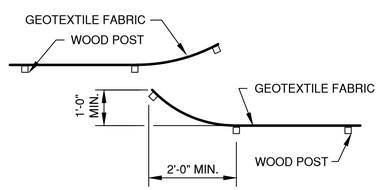

HOOK METHOD 8

JOINING TWO LENGTHS OF SILT FENCE

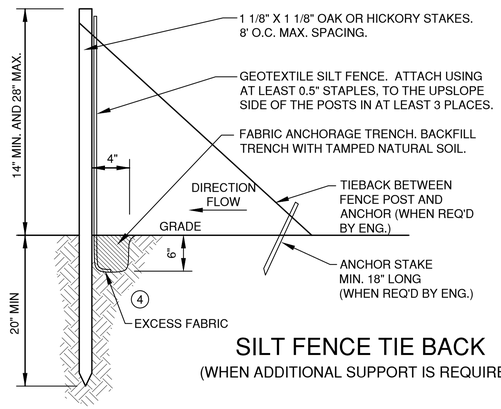

SILT FENCE TIE BACK
(WHEN ADDITIONAL SUPPORT IS REQUIRED)

SILT FENCE NOTES:

1. EROSION CONTROL SHALL BE PROVIDED IN ACCORDANCE WITH WDNR TECHNICAL STANDARD 1056.
2. THE GEOTEXTILE FABRIC CONSISTS OF EITHER WOVEN OR NON-WOVEN POLYESTER, POLYPROPYLENE, STABILIZED NYLON,POLYETHYLENE OR POLYVINYLIDENE CHLORIDE. NON-WOVEN FABRIC MAY BE NEEDLE PUNCHED, HEAT BONDED, RESIN BONDED, OR COMBINATIONS THEREOF.
3. MINIMUM 14 GAUGE WIRE REQUIRED, FOLD FABRIC 3" OVER THE WIRE AND STAPLE OR PLACE WIRE RINGS ON 12" C.C.
4. EXCAVATE A TRENCH A MINIMUM OF 4" WIDE AND 6" DEEP TO BURY AND ANCHOR THE GEOTEXTILE FABRIC. FOLD MATERIAL TO FIT TRENCH AND BACKFILL AND COMPACT TRENCH WITH EXCAVATED SOIL
5. WIRE SUPPORT FENCE SHALL BE 14 GAUGE MINIMUM WOVEN WIRE WITH A MAXIMUM MESH SPACING OF 6". SECURE TOP OF GEOTEXTILE FABRIC TO TOP OF FENCE WITH STAPLES OR WIRE RINGS AT 12" C.C. (TYPE B)
6. GEOTEXTILE FABRIC SHALL BE REINFORCED WITH AN INDUSTRIAL POLYPROPYLENE NETTING WITH A MAXIMUM MESH SPACING OF 3/4" OR EQUAL. A HEAVY DUTY NYLON TOP SUPPORT CORD OR EQUIVALENT IS REQUIRED. (TYPE A)
7. STEEL POSTS SHALL BE 5' LONG WITH A MINIMUM STRENGTH OF 1.33 LBS PER FOOT. WOOD POSTS SHALL BE A MINIMUM SIZE OF 1 1/8" X 1 1/8" OF OAK OR HICKORY. THE POSTS SHALL BE A MINIMUM OF 3' LONG FOR 24" SILT FENCE AND 4' LONG FOR 36" SILT FENCE.
8. CONSTRUCT SILT FENCE FROM A CONTINUOUS ROLL, IF POSSIBLE, BY CUTTING LENGTHS TO AVOID JOINTS. IF A JOINT IS NECESSARY, USE ONE OF THE FOLLOWING TWO METHODS: A.) TWIST METHOD -- OVERLAP THE END POSTS AND TWIST, OR ROTATE, AT LEAST 180 DEGREES, B:) HOOK METHOD -- HOOK THE END OF EACH SILT FENCE LENGTH.
9. THE MAXIMUM SPACING OF POSTS FOR WOVEN FABRIC SILT FENCE SHALL BE 8 FEET AND FOR NON-WOVEN FABRIC, 3 FEET.

EROSION CONTROL SHEET FLOW NOTES:

1. ANY SOIL STOCKPILED THAT REMAINS FOR MORE THAN 7 DAYS, SHALL BE COVERED OR TREATED WITH STABILIZATION PRACTICES SUCH AS TEMPORARY OR PERMANENT SEEDING AND MULCHING.
2. A MINIMUM OF 4" OF TOPSOIL MUST BE APPLIED TO ALL AREAS TO BE SEEDED OR SODDED.
3. ALL WASTE AND UNUSED BUILDING MATERIALS (INCLUDING GARBAGE, DEBRIS, CLEANING WASTES, WASTEWATER, TOXIC MATERIALS, OR HAZARDOUS MATERIALS) SHALL BE PROPERLY DISPOSED OF AND NOT ALLOWED TO BE CARRIED OFF-SITE BY RUNOFF OR WIND.
4. ALL OFF-SITE SEDIMENT DEPOSITS OCCURRING AS A RESULT OF CONSTRUCTION WORK OR A STORM EVENT SHALL BE CLEANED UP BY THE END OF EACH DAY. **FLUSHING SHALL NOT BE ALLOWED.**
5. ANY SOIL EROSION THAT OCCURS AFTER FINAL GRADING AND/OR THE APPLICATION OF STABILIZATION MEASURES MUST BE REPAIRED AND THE STABILIZATION WORK REDONE.
6. FOR ANY DISTURBED AREA THAT REMAINS INACTIVE FOR GREATER THAN 7 WORKING DAYS, OR WHERE GRADING WORK EXTENDS BEYOND THE PERMANENT SEEDING DEADLINES, THE SITE MUST BE TREATED WITH TEMPORARY STABILIZATION MEASURES SUCH AS SOIL TREATMENT, TEMPORARY SEEDING AND/OR MULCHING.
7. ALL TEMPORARY EROSION CONTROL PRACTICES SHALL BE MAINTAINED UNTIL THE SITE IS STABILIZED WITH 70% VEGETATION AND A NOTICE OF TERMINATION HAS BEEN APPROVED BY THE WDNR.
8. WIND EROSION SHALL BE KEPT TO A MINIMUM DURING CONSTRUCTION. WATERING, MULCH OR A TACKING AGENT MAY NEED TO BE UTILIZED TO PROTECT NEARBY RESIDENCES/WATER RESOURCES.
9. CONTRACTOR IS RESPONSIBLE FOR MAINTAINING ALL THE EROSION CONTROL MEASURES IN CONFORMANCE WITH THE WDNR CONSERVATION PRACTICE STANDARDS LATEST EDITION.
10. UPON COMPLETION OF STORM INLET CONSTRUCTION, INSTALL STORM DRAIN INLET PROTECTION FOR CONSTRUCTION SITE AS SPECIFIED.
11. FINE SEDIMENT ACCUMULATIONS SHALL BE CLEANED FROM STREETS, PRIVATE DRIVES, OR PARKING AREAS BY MANUAL OR MECHANICAL SWEEPING A MINIMUM OF ONCE A WEEK AND BEFORE ALL IMMINENT RAINS
12. EROSION AND SEDIMENT CONTROL STRUCTURES SHALL BE INSPECTED WEEKLY AND WITHIN 24 HOURS OF RAINFALL OF 0.5" OR MORE.

NO.	DATE	APPROV.	REVISION
1	7/9/2026	AJB	CONSTRUCTION PLAN SET

DRAWN GSG
CHECKED AJB
DESIGNED GSG

HOFFMASTER/CREATIVE CONVERTING BUILDING ADDITION
FOR KELLER, INC.
CITY OF CLINTONVILLE
WAUPACA COUNTY, WI

EROSION CONTROL
SHEET FLOW DETAILS

DATE 01/2026
FILE 2450043_EC
JOB NO. 2450043

Robert E. Lee & Associates, Inc.
1250 Centennial Centre Blvd | Hobart, WI | 920-662-9641 | releeinc.com

SHEET NO. 15

File: C:\Wis2007\Strm\Temp\AcPublish_16288\2450043_EC.dwg
Print Date: Jul 09, 2026 - 9:50am
LAYOUT: 4 SHEET FLOW

* TRACKOUT CONTROL TO BE PROVIDED PER DETAILS BELOW AND IN ACCORDANCE WITH WDNR TECHNICAL STANDARD 1057

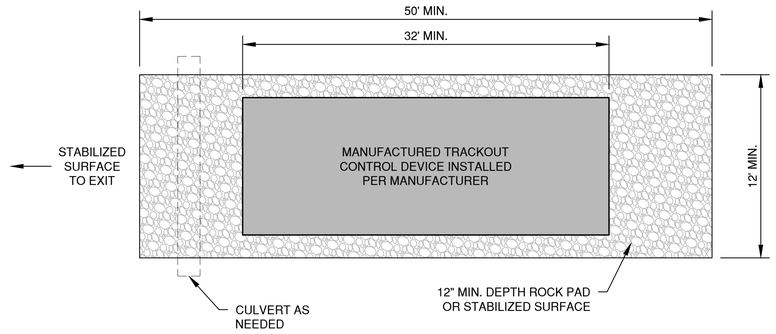

PLAN VIEW
(NTS)

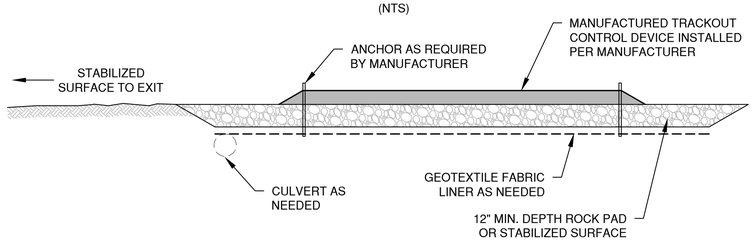

SECTION VIEW

NOTES:

1. THIS DETAIL IS PROVIDED AS AN EXAMPLE. COMPLY WITH MANUFACTURER'S SPECIFICATIONS WHILE ALSO MEETING THE MINIMUM MANUFACTURED TRACKING PAD LENGTH AND WIDTH DESCRIBED IN THIS TECHNICAL STANDARD.
2. INSTALL SUCH THAT RUNOFF FLOWS TO AN APPROVED TREATMENT PRACTICE.
3. A THINNER STONE LAYER OR OTHER STABLE SURFACE MAY BE ACCEPTABLE SUCH THAT RUTTING IS MINIMIZED AS VEHICLES MOUNT OR DISMOUNT FROM THE MANUFACTURERS TRACKOUT CONTROL DEVICE.
4. SELECT FABRIC TYPE BASED ON SOIL CONDITIONS AND VEHICLES LOADING.
5. DIRECT ALL EXISTING VEHICLES OVER MANUFACTURED TRACKOUT CONTROL DEVICE. STONE TRACKING PAD INSTALLATION ACROSS REMAINING ACCESS WIDTH IS RECOMMENDED. A 12' MINIMUM CAN BE USED WHEN EXITING TRAFFIC IS RESTRICTED TO A DEDICATED EGRESS LANE.
6. IF MINIMUM INSTALLATION LENGTH IS NOT POSSIBLE DUE TO SITE GEOMETRY, INSTALL THE MAXIMUM LENGTH PRACTICABLE AND SUPPLEMENT WITH ADDITIONAL PRACTICES AS NEEDED.
7. ACCOMMODATE EXITING VEHICLES IN EXCESS OF MANUFACTURED TRACKOUT CONTROL DEVICE WEIGHT CAPACITY WITH OTHER TREATMENT PRACTICES.

MANUFACTURED TRACKOUT CONTROL DETAIL

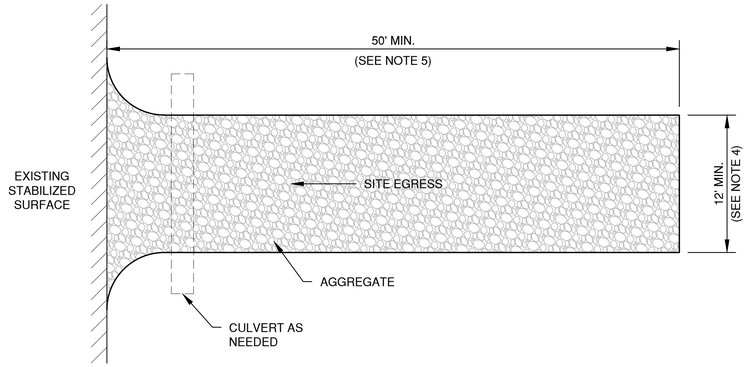

PLAN VIEW
(NTS)

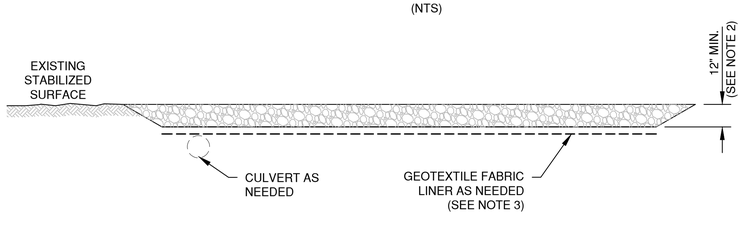

SECTION VIEW

NOTES:

1. USE HARD, DURABLE, ANGULAR STONE OR RECYCLED CONCRETE, MEETING THE FOLLOWING GRADATION:

SIEVE SIZE:	PERCENT BY WEIGHT PASSING:
3"	100
2 1/2"	90-100
1 1/2"	25-60
3/4"	0-20
3/8"	0-5

2. SLOPE THE STONE TRACKING PAD IN A MANNER TO DIRECT RUNOFF TO AN APPROVED TREATMENT PRACTICE.
3. SELECT FABRIC TYPE BASED ON SOIL CONDITIONS AND VEHICLES LOADING.
4. INSTALL TRACKING PAD ACROSS FULL WIDTH OF THE ACCESS POINT, OR RESTRICT EXISTING TRAFFIC TO A DEDICATED EGRESS LANE AT LEAST 12 FEET WIDE ACROSS THE TOP OF THE PAD.
5. IF A 50' PAD LENGTH IS NOT POSSIBLE DUE TO SITE GEOMETRY, INSTALL THE MAXIMUM LENGTH PRACTICABLE AND SUPPLEMENT WITH ADDITIONAL PRACTICES AS NEEDED.

STONE TRACKING PAD DETAIL

File: C:\Wk001\Shrd\Temp\AcPublish_16280\2450043_EC.dwg
Plot Date: Jul 09, 2026 - 9:35am
Layout: 9_Trackout

NO.	DATE	APPROV.	REVISION
1	7/9/2026	AJB	CONSTRUCTION PLAN SET

NO.	DATE	APPROV.	REVISION

DRAWN GSG
CHECKED AJB
DESIGNED GSG

HOFFMASTER/CREATIVE CONVERTING BUILDING ADDITION
FOR KELLER, INC.
CITY OF CLINTONVILLE
WAUPACA COUNTY, WI

EROSION CONTROL
TRACKOUT CONTROL PRACTICES

DATE 01/2026
FILE 2450043_EC
JOB NO. 2450043

Robert E. Lee & Associates, Inc.
1250 Centennial Centre Blvd | Hobart, WI | 920-662-9641 | releeinc.com

SHEET NO. 16

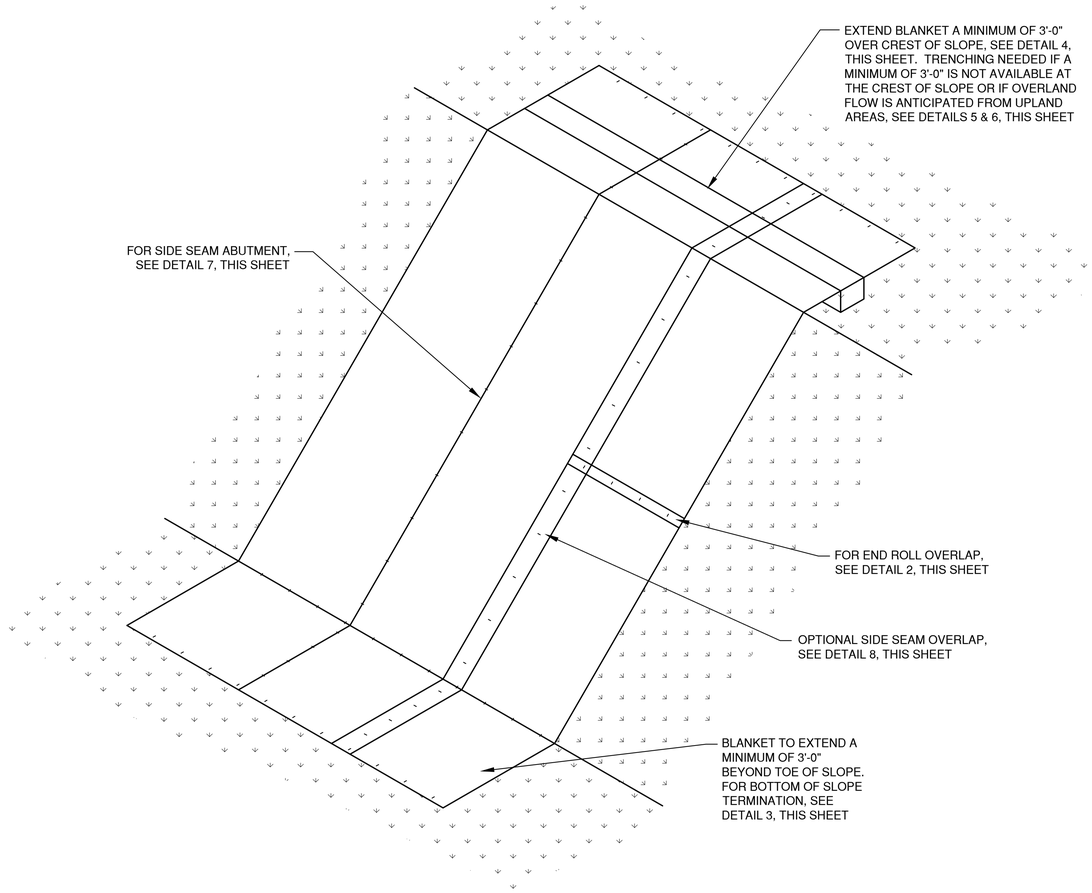

SLOPE DETAIL 1

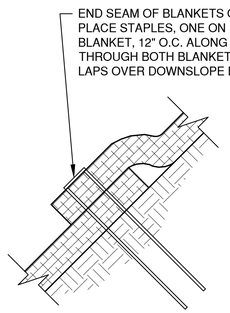

END ROLL OVERLAP 2

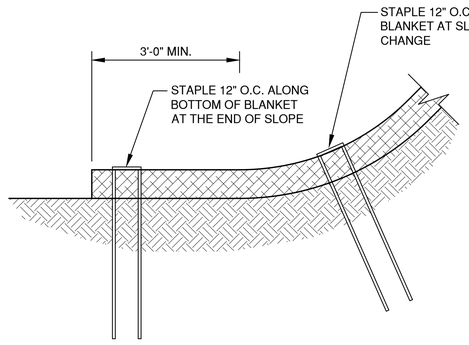

BOTTOM OF SLOPE TERMINATION 3

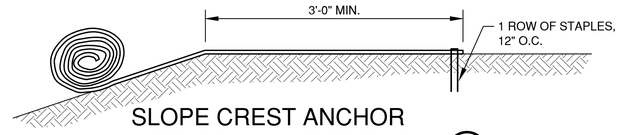

SLOPE CREST ANCHOR METHOD "A" (NO TRENCH) 4

DO NOT NEED TO TRENCH BLANKET IN IF IT CAN BE EXTENDED A MINIMUM OF 3'-0" OVER THE CREST OF THE SLOPE.

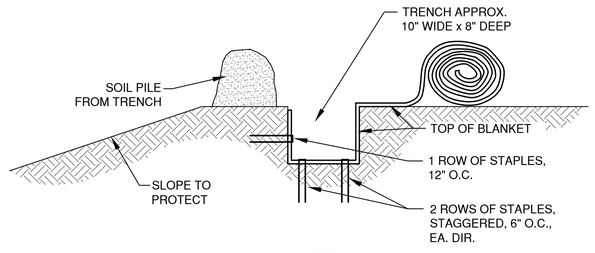

SLOPE TRENCHING METHOD "B" 5

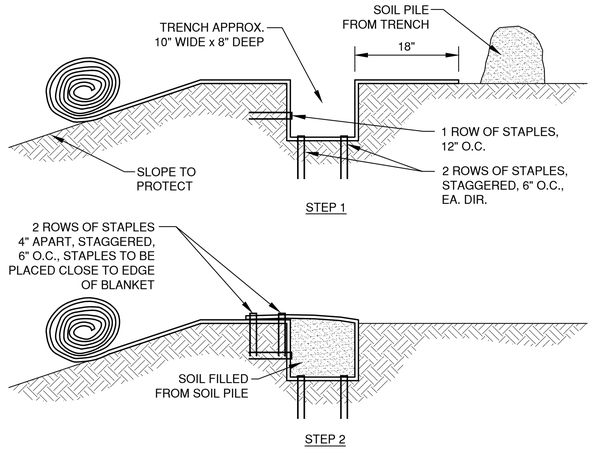

SLOPE TRENCHING METHOD "C" 6

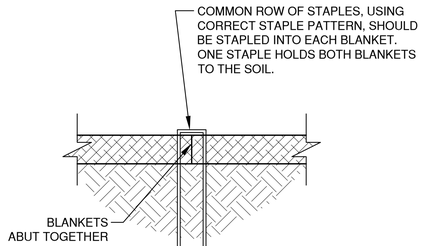

SIDE SEAM ABUT STAPLE DETAIL 7

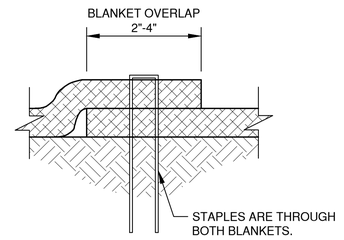

SIDE SEAM OVERLAP STAPLE DETAIL 8

NOTES:

1. STAPLE PATTERNS ARE DEPENDENT ON SITE CONDITIONS. SEE MANUFACTURER STAPLE PATTERN GUIDE FOR DETAILS.

NO.	DATE	APPROV.	REVISION
1	7/9/2026	AJB	CONSTRUCTION PLAN SET

DRAWN GSG | CHECKED AJB | DESIGNED GSG

HOFFMASTER/CREATIVE CONVERTING BUILDING ADDITION
FOR KELLER, INC.
CITY OF CLINTONVILLE
WAUPACA COUNTY, WI

EROSION CONTROL
EROSION MAT
SLOPE APPLICATION DETAILS

DATE 01/2026 | FILE 2450043_EC | JOB NO. 2450043

Robert E. Lee & Associates, Inc.
1250 Centennial Centre Blvd | Hobart, WI | 920-662-9641 | releeinc.com

SHEET NO. 17

File: C:\Wisdot\Temp\AcPublish_16280\2450043_EC.dwg
Plot Date: Jul 09, 2026 - 9:36am
LAYOUT: 6 SLOPE detail

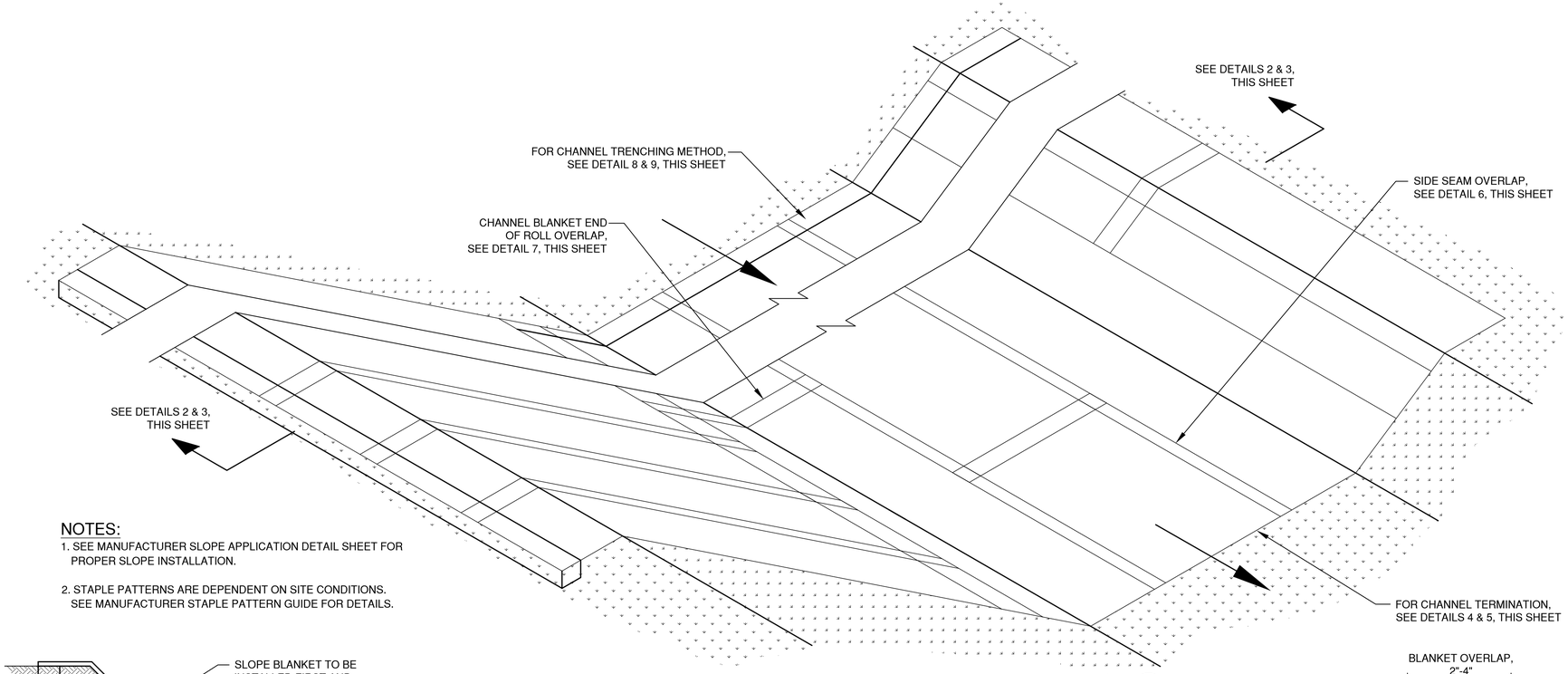

NOTES:

1. SEE MANUFACTURER SLOPE APPLICATION DETAIL SHEET FOR PROPER SLOPE INSTALLATION.
2. STAPLE PATTERNS ARE DEPENDENT ON SITE CONDITIONS. SEE MANUFACTURER STAPLE PATTERN GUIDE FOR DETAILS.

CHANNEL DETAIL 1

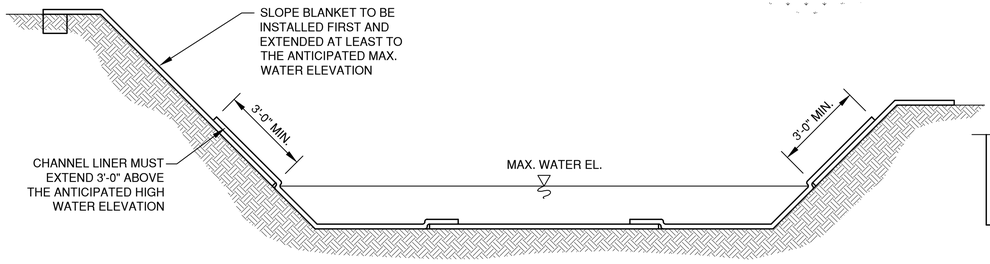

CHANNEL INSTALLATION METHOD "A" 2

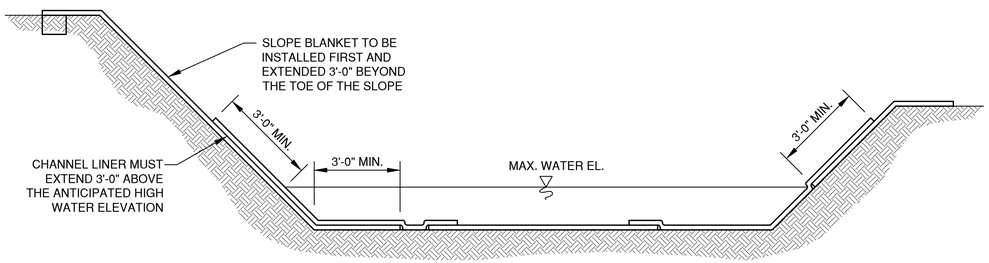

CHANNEL INSTALLATION METHOD "B" 3

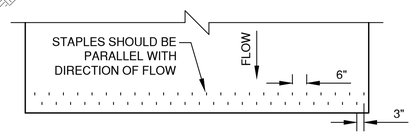

CHANNEL TERMINATION PLAN 4

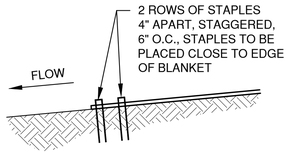

CHANNEL TERMINATION 5

SIDE SEAM OVERLAP STAPLE DETAIL 6

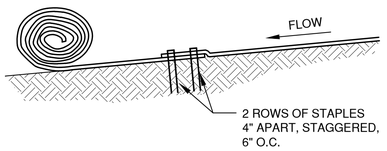

CHANNEL BLANKET END OF ROLL OVERLAP 7

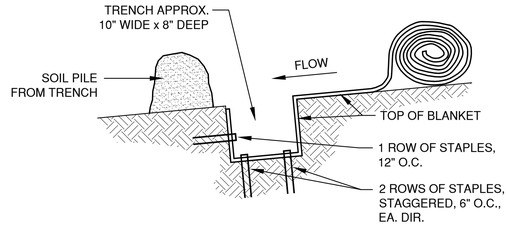

CHANNEL TRENCHING METHOD "A" 8

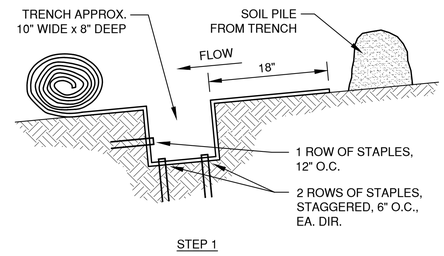

CHANNEL TRENCHING METHOD "B" 9

NO.	DATE	APPROV.	REVISION	NO.	DATE	APPROV.	REVISION
1	7/9/2026	AJB	CONSTRUCTION PLAN SET				

DRAWN GSG
CHECKED AJB
DESIGNED GSG

HOFFMASTER/CREATIVE CONVERTING BUILDING ADDITION
FOR KELLER, INC.
CITY OF CLINTONVILLE
WAUPACA COUNTY, WI

EROSION CONTROL
EROSION MAT
CHANNEL APPLICATION DETAILS

DATE 01/2026
FILE 2450043_EC
JOB NO. 2450043

Robert E. Lee & Associates, Inc.
1250 Centennial Centre Blvd | Hobart, WI | 920-662-9641 | releeinc.com

SHEET NO. 18

File: C:\Wis\DOT\Strm\Temp\AcPublish_16288\2450043_EC.dwg
Print Date: Jul 09, 2026 - 9:50am
LAYOUT: 7- CHANNEL EMAT

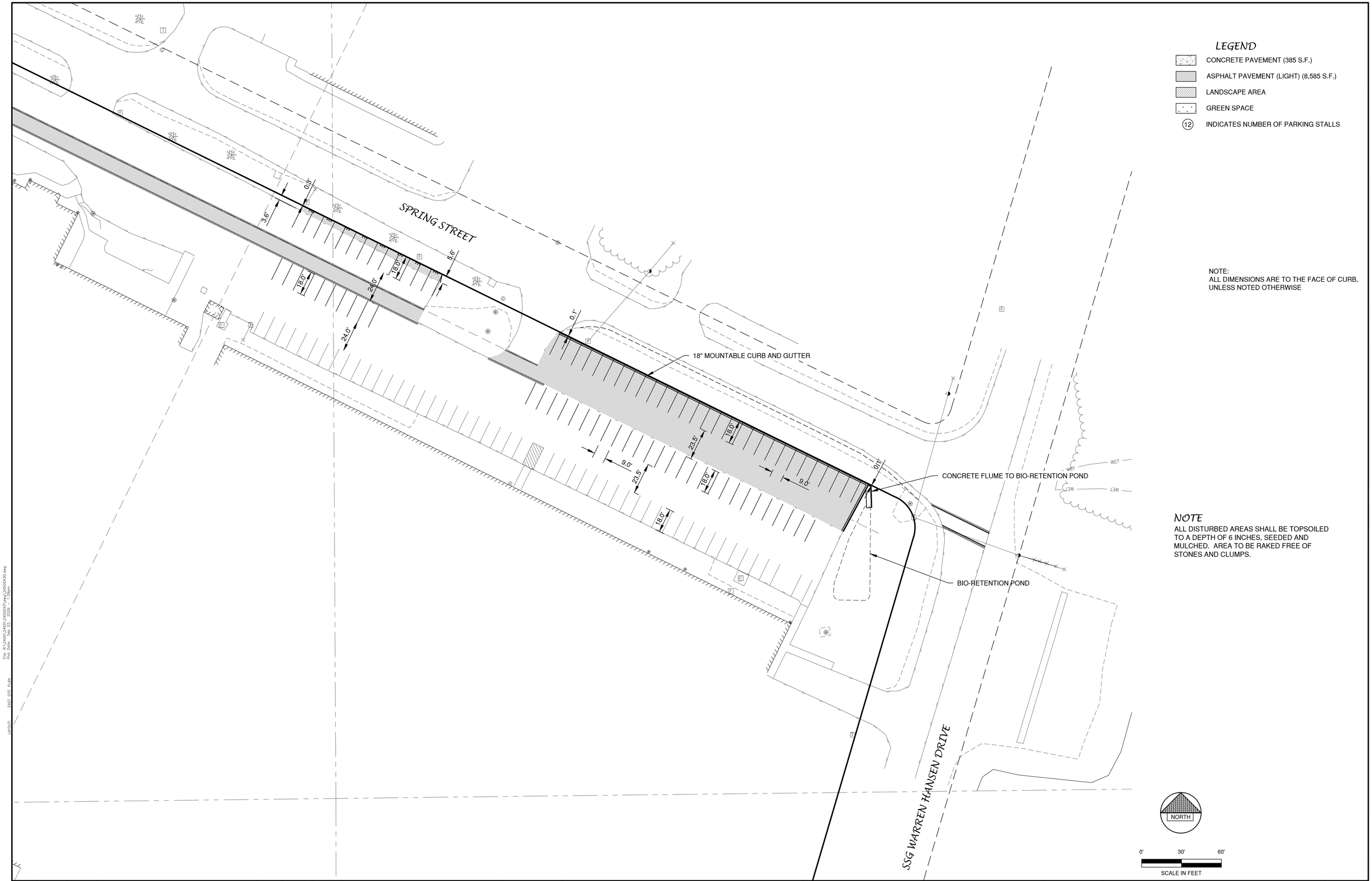

File: R:\2400\2450\2450043\dwg\2450043D.dwg
Plot Date: Sep 22, 2026 - 1:39pm
Layout: EAST SITE PLAN

NO.	DATE	APPROV.	REVISION	NO.	DATE	APPROV.	REVISION
1	6/16/2026	AJB	CITY SITE PLAN SUBMITTAL				
2	7/9/2026	AJB	CONSTRUCTION PLAN SET				

DRAWN GSG
CHECKED AJB
DESIGNED GSG

HOFFMASTER/CREATIVE CONVERTING BUILDING ADDITION
FOR KELLER, INC.
CITY OF CLINTONVILLE
WAUPACA COUNTY, WI

EAST SITE PLAN

DATE 01/2026
FILE 2450043D
JOB NO. 2450043

Robert E. Lee & Associates, Inc.
1250 Centennial Centre Blvd | Hobart, WI | 920-662-9641 | releeinc.com

SHEET NO. 19

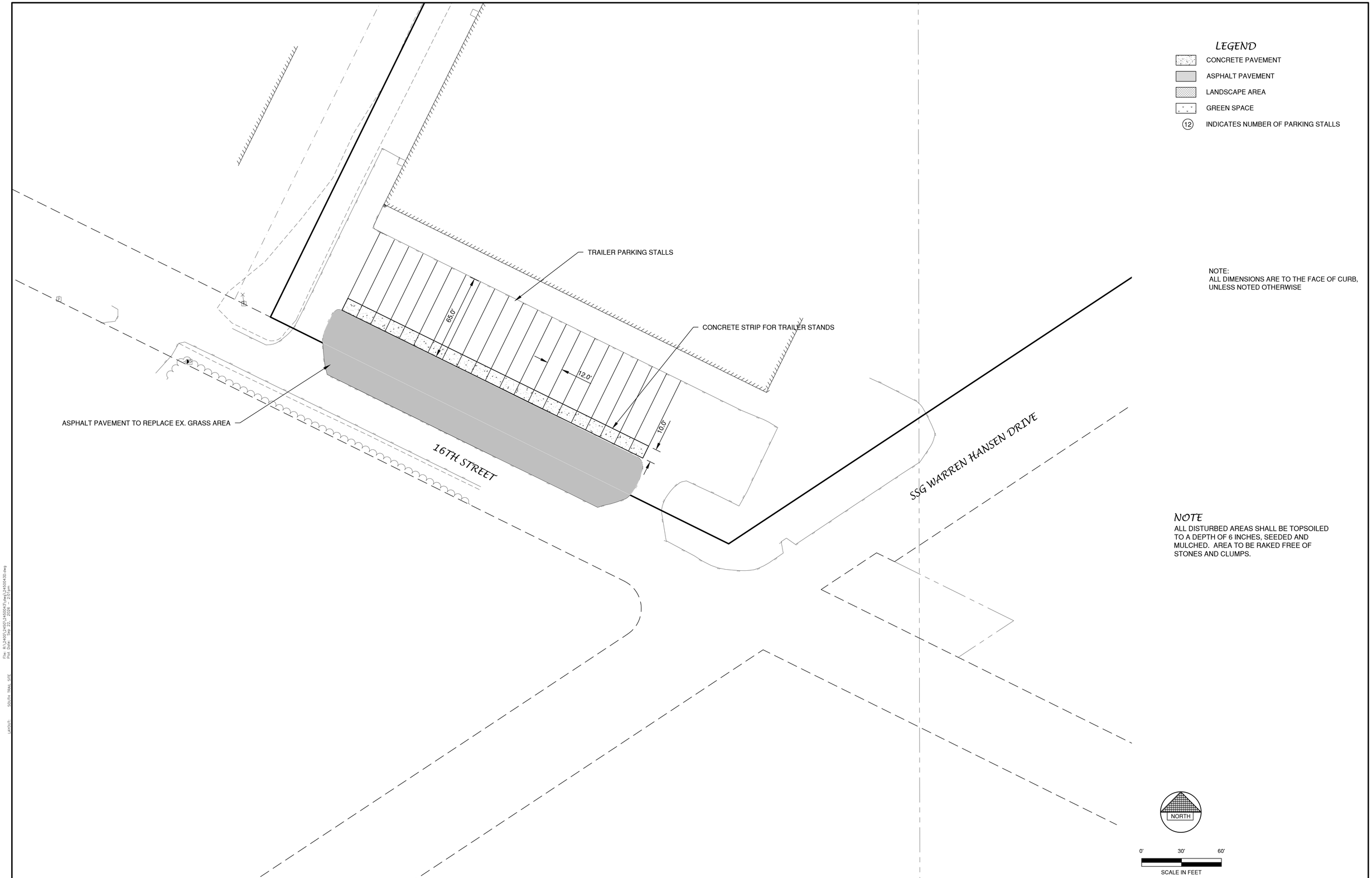

NO.	DATE	APPROV.	REVISION	NO.	DATE	APPROV.	REVISION
1	6/16/2026	AJB	CITY SITE PLAN SUBMITTAL				
2	7/9/2026	AJB	CONSTRUCTION PLAN SET				

DRAWN GSG
CHECKED AJB
DESIGNED GSG

HOFFMASTER/CREATIVE CONVERTING BUILDING ADDITION
FOR KELLER, INC.
CITY OF CLINTONVILLE
WAUPACA COUNTY, WI

SOUTH TRAILER PARKIGN SITE PLAN

DATE 01/2026
FILE 2450043D
JOB NO. 2450043

Robert E. Lee & Associates, Inc.
1250 Centennial Centre Blvd | Hobart, WI | 920-662-9641 | releeinc.com

SHEET NO. 20

File: R:\2450\2450043\dwg\2450043D.dwg
Plot Date: Sep 22, 2026 - 2:31pm
Layout: South Trailer Site

Appendix

B

Certified Survey Map

CERTIFIED SURVEY MAP 8469

PART OF LOT 1, VOLUME 10 OF CERTIFIED SURVEY MAPS, PAGE 190, MAP NUMBER 3319, DOCUMENT NUMBER 492894, SAID MAP LOCATED IN PART OF THE SOUTHWEST 1/4 OF THE NORTHEAST 1/4, ALL OF LOTS 1 AND 2, VOLUME 9 OF CERTIFIED SURVEY MAPS, PAGE 60, MAP NUMBER 2963, DOCUMENT NUMBER 470589 AND PART OF VACATED RAILROAD AVENUE, SAID MAP AND VACATED RAILROAD AVENUE LOCATED IN PARTS OF THE SOUTHWEST 1/4 OF THE NORTHEAST 1/4, SOUTHEAST 1/4 OF THE NORTHEAST 1/4 AND THE NORTHWEST 1/4 OF THE SOUTHEAST 1/4, AND PART OF LOT 1, VOLUME 12, OF CERTIFIED SURVEY MAPS, PAGE 161, MAP NUMBER 4050, DOCUMENT NUMBER 525581, SAID MAP LOCATED IN PARTS OF THE SOUTHWEST 1/4 OF THE NORTHEAST 1/4, SOUTHEAST 1/4 OF THE NORTHEAST 1/4, NORTHWEST 1/4 OF THE SOUTHEAST 1/4 AND NORTHEAST 1/4 OF THE SOUTHEAST 1/4, ALL LOCATED IN SECTION 24, TOWNSHIP 25 NORTH, RANGE 14 EAST, CITY OF CLINTONVILLE, WAUPACA COUNTY, WISCONSIN.

DOC# 940736

Recorded on
Jul 6, 2026 02:58 PM

JEREMY SCHOENIKE
WAUPACA COUNTY
REGISTER OF DEEDS
Fee Amount: $30.00
Pages: 4

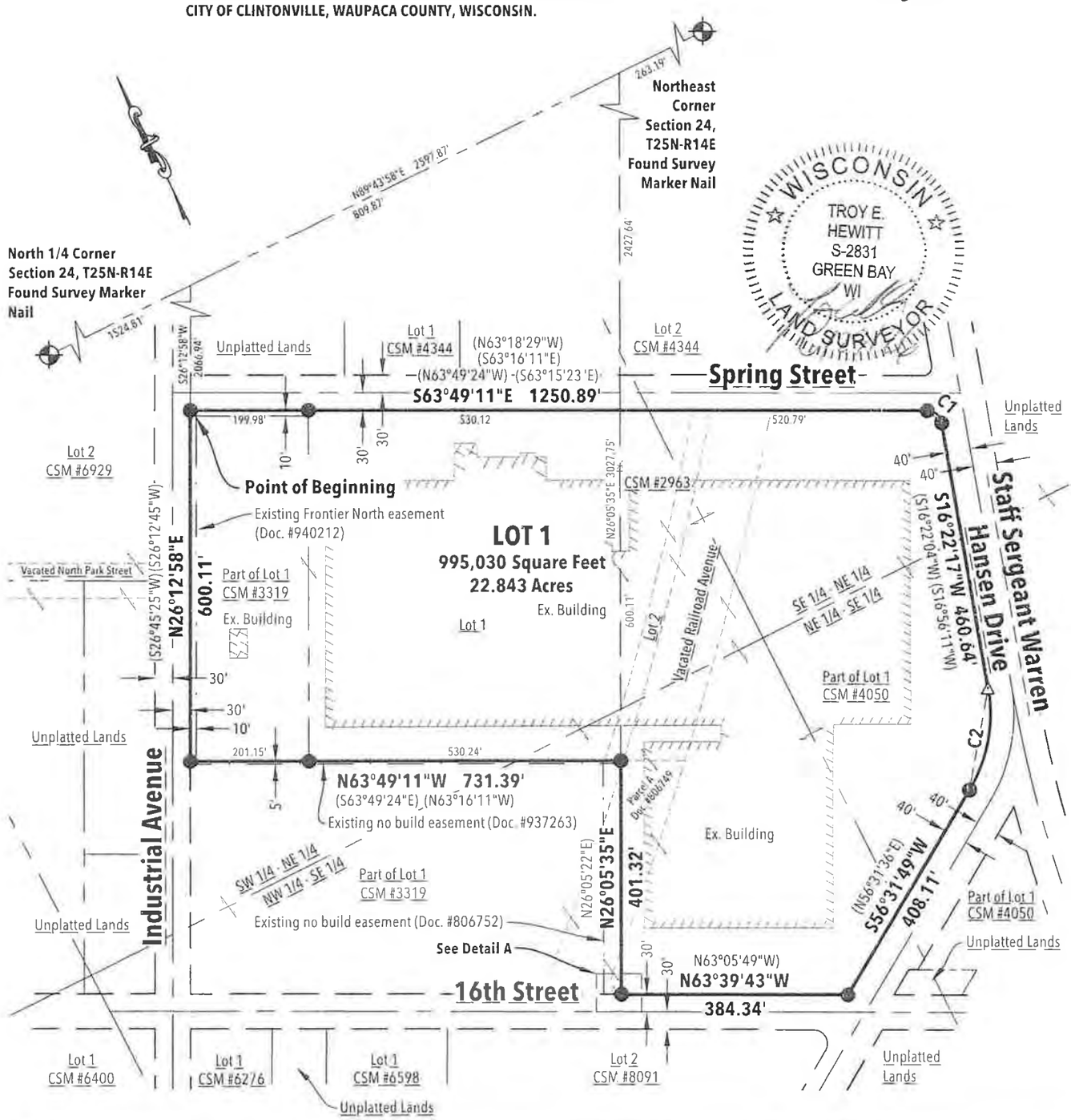

Curve Table							
Curve #	Delta	Radius	Length	Chord Direction	Chord Length	Tangent Bearing	Second Tangent Bearing
C1	80°11'28"	25.00'	34.99'	S23°43'27"E	32.20'	N16°22'17"E	N63°49'11"W
C2	40°09'32"	260.00'	182.24'	S36°27'03"W (N36°26'50"E)	178.53'	N56°31'49"E	N16°22'17"E

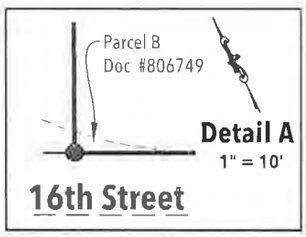

SCALE: 1"= 240'

0' 120' 240' 480'

Bearings are referenced to the Waupaca County Coordinate System. The north line of the Northeast 1/4 of Section 24, T25N-R14E bears N89°43'58"E.

LEGEND:

- ● Existing 1" Iron Pipe
- △ Existing Mag Nail
- ⊕ County PLSS Monument
- ( ) Record bearing or distance

Robert E. Lee & Associates, Inc.
1250 Centennial Centre Blvd | Hobart, WI | 920-662-9641 | releeinc.com

R:\2400\2450\2450043\dwg\2450043_csm.dwg

SHEET 1 OF 4

V. 37 P114

CERTIFIED SURVEY MAP 8469

PART OF LOT 1, VOLUME 10 OF CERTIFIED SURVEY MAPS, PAGE 190, MAP NUMBER 3319, DOCUMENT NUMBER 492894, SAID MAP LOCATED IN PART OF THE SOUTHWEST 1/4 OF THE NORTHEAST 1/4, ALL OF LOTS 1 AND 2, VOLUME 9 OF CERTIFIED SURVEY MAPS, PAGE 60, MAP NUMBER 2963, DOCUMENT NUMBER 470589 AND PART OF VACATED RAILROAD AVENUE, SAID MAP AND VACATED RAILROAD AVENUE LOCATED IN PARTS OF THE SOUTHWEST 1/4 OF THE NORTHEAST 1/4, SOUTHEAST 1/4 OF THE NORTHEAST 1/4 AND THE NORTHWEST 1/4 OF THE SOUTHEAST 1/4, AND PART OF LOT 1, VOLUME 12, OF CERTIFIED SURVEY MAPS, PAGE 161, MAP NUMBER 4050, DOCUMENT NUMBER 525581, SAID MAP LOCATED IN PARTS OF THE SOUTHWEST 1/4 OF THE NORTHEAST 1/4, SOUTHEAST 1/4 OF THE NORTHEAST 1/4, NORTHWEST 1/4 OF THE SOUTHEAST 1/4 AND NORTHEAST 1/4 OF THE SOUTHEAST 1/4, ALL LOCATED IN SECTION 24, TOWNSHIP 25 NORTH, RANGE 14 EAST, CITY OF CLINTONVILLE, WAUPACA COUNTY, WISCONSIN.

SURVEYOR'S CERTIFICATE:

I, Troy E. Hewitt, Professional Land Surveyor, do hereby certify that by the order and under the direction of the owners listed hereon, I have surveyed, mapped and combined Part of Lot 1, Volume 10 of Certified Survey Maps, Page 190, Map Number 3319, Document Number 492894, said map located in part of the Southwest 1/4 of the Northeast 1/4, all of Lots 1 and 2, Volume 9 of Certified Survey Maps, Page 60, Map Number 2963, Document Number 470589 and part of vacated Railroad Avenue, said map and vacated Railroad Avenue located in parts of the Southwest 1/4 of the Northeast 1/4, Southeast 1/4 of the Northeast 1/4 and the Northwest 1/4 of the Southeast 1/4, and part of Lot 1, Volume 12, of Certified Survey Maps, Page 161, Map Number 4050, Document Number 525581, said map located in parts of the Southwest 1/4 of the Northeast 1/4, Southeast 1/4 of the Northeast 1/4, Northwest 1/4 of the Southeast 1/4 and Northeast 1/4 of the Southeast 1/4, all located in Section 24, Township 25 North, Range 14 East, City of Clintonville, Waupaca County, Wisconsin more fully described as follows:

Commencing at the North 1/4 corner of said Section 24; thence N89°43'58"E, 1524.81 feet on the north line of said Section 24; thence S26°12'58"W, 2066.94 feet on the northeasterly extension of the southeast right of way of Industrial Avenue to the southwest right of way of Spring Street, the POINT OF BEGINNING; thence S63°49'11"E, 1250.89 feet on said southwest right of way; thence 34.99 feet on the arc of a 25.00 foot radius curve to the right, having a long chord which bears S23°43'27"E, 32.20 feet on said southwest right of way to the west right of way of Staff Sergeant Warren Hansen Drive; thence S16°22'17"W, 460.64 feet on said west right of way; thence 182.24 feet on the arc of a 260.00 foot radius curve to the right, having a long chord which bears S36°27'03"W, 178.53 feet on said west right of way to the northwest right of way of said Staff Sergeant Warren Hansen Drive; thence S56°31'49"W, 408.11 feet on said northwest right of way to the northeast right of way of 16th/ Street; thence N63°39'43"W, 384.34 feet on said northeast right of way to the northwest line of lands described as Parcel B in Document Number 806749; thence N26°05'35"E, 401.32 feet on said northwest line and it's northeasterly extension and continuing on the northwest line of Parcel A of said lands to the northern-most corner thereof; thence N63°49'11"W, 731.39 feet on the southwest line of said Lot 2 and continuing on the southwest line of said Lot 1, Volume 9 of Certified Survey Maps, Page 60, Map Number 2963, Document Number 470589 and its northwesterly extension to the southeast right of way of Industrial Avenue; thence N26°12'58"E, 600.11 feet on said southeast right of way to the Point of Beginning.

Said parcel contains 995,030 Square Feet (22.843 Acres) of land more or less. Subject to any and all easements and restrictions of record.

That the within map is a true and correct representation of the exterior boundaries of the land surveyed and the combination of that land and that I have fully complied with the provisions of Chapter 236.34 of the Wisconsin Statutes in the surveying, mapping and combining of the same.

Dated this 24 day of JUNE, 2026.

Troy E. Hewitt PLS #2831
ROBERT E. LEE & ASSOCIATES, INC.
Original: 5/22/2026



CERTIFIED SURVEY MAP 8469

PART OF LOT 1, VOLUME 10 OF CERTIFIED SURVEY MAPS, PAGE 190, MAP NUMBER 3319, DOCUMENT NUMBER 492894, SAID MAP LOCATED IN PART OF THE SOUTHWEST 1/4 OF THE NORTHEAST 1/4, ALL OF LOTS 1 AND 2, VOLUME 9 OF CERTIFIED SURVEY MAPS, PAGE 60, MAP NUMBER 2963, DOCUMENT NUMBER 470589 AND PART OF VACATED RAILROAD AVENUE, SAID MAP AND VACATED RAILROAD AVENUE LOCATED IN PARTS OF THE SOUTHWEST 1/4 OF THE NORTHEAST 1/4, SOUTHEAST 1/4 OF THE NORTHEAST 1/4 AND THE NORTHWEST 1/4 OF THE SOUTHEAST 1/4, AND PART OF LOT 1, VOLUME 12, OF CERTIFIED SURVEY MAPS, PAGE 161, MAP NUMBER 4050, DOCUMENT NUMBER 525581, SAID MAP LOCATED IN PARTS OF THE SOUTHWEST 1/4 OF THE NORTHEAST 1/4, SOUTHEAST 1/4 OF THE NORTHEAST 1/4, NORTHWEST 1/4 OF THE SOUTHEAST 1/4 AND NORTHEAST 1/4 OF THE SOUTHEAST 1/4, ALL LOCATED IN SECTION 24, TOWNSHIP 25 NORTH, RANGE 14 EAST, CITY OF CLINTONVILLE, WAUPACA COUNTY, WISCONSIN.

OWNER'S CERTIFICATE:

As owners, we do hereby certify that we caused the land described on this Certified Survey Map to be surveyed, mapped and combined as represented on this map. We also do further certify that this Certified Survey Map is required by s-236.34 to be submitted to the following for approval or objection: CITY OF CLINTONVILLE

Arthur S. Cooper 7-1-2026

Arthur S. Cooper, Vice President Date
CI05 Clintonville Wi, LLC

STATE OF ~~WISCONSIN~~ VIRGINIA
FAIRFAX COUNTY) SS

Personally came before me this 1st day of July, 2026, the above named to me known to be the same person who executed the foregoing instrument and acknowledged the same.

Notary Public, State of ~~Wisconsin~~ Virginia

(print name) Yula Tamashiro

My commission expires: 10/31/29

YULA KIM TAMASHIRO
NOTARY PUBLIC
REGISTRATION # 7966736
COMMONWEALTH OF VIRGINIA
MY COMMISSION EXPIRES
OCTOBER 31, 2029

WISCONSIN
TROY E. HEWITT
S-2831
GREEN BAY WI
LAND SURVEYOR
6/24/26

REL Robert E. Lee & Associates, Inc.
1250 Centennial Centre Blvd | Hobart, WI | 920-662-9641 | releeinc.com

R:\2400\2450\2450043\dwg\2450043_csm.dwg

SHEET 3 OF 4

V37 P114

CERTIFIED SURVEY MAP 8469

PART OF LOT 1, VOLUME 10 OF CERTIFIED SURVEY MAPS, PAGE 190, MAP NUMBER 3319, DOCUMENT NUMBER 492894, SAID MAP LOCATED IN PART OF THE SOUTHWEST 1/4 OF THE NORTHEAST 1/4, ALL OF LOTS 1 AND 2, VOLUME 9 OF CERTIFIED SURVEY MAPS, PAGE 60, MAP NUMBER 2963, DOCUMENT NUMBER 470589 AND PART OF VACATED RAILROAD AVENUE, SAID MAP AND VACATED RAILROAD AVENUE LOCATED IN PARTS OF THE SOUTHWEST 1/4 OF THE NORTHEAST 1/4, SOUTHEAST 1/4 OF THE NORTHEAST 1/4 AND THE NORTHWEST 1/4 OF THE SOUTHEAST 1/4, AND PART OF LOT 1, VOLUME 12, OF CERTIFIED SURVEY MAPS, PAGE 161, MAP NUMBER 4050, DOCUMENT NUMBER 525581, SAID MAP LOCATED IN PARTS OF THE SOUTHWEST 1/4 OF THE NORTHEAST 1/4, SOUTHEAST 1/4 OF THE NORTHEAST 1/4, NORTHWEST 1/4 OF THE SOUTHEAST 1/4 AND NORTHEAST 1/4 OF THE SOUTHEAST 1/4, ALL LOCATED IN SECTION 24, TOWNSHIP 25 NORTH, RANGE 14 EAST, CITY OF CLINTONVILLE, WAUPACA COUNTY, WISCONSIN.

CITY OF CLINTONVILLE APPROVAL CERTIFICATE

This Certified Survey Map has been reviewed and is hereby approved and accepted by the City of Clintonville on _____, 2026.

Jeannie Schley, Clintonville Mayor

Peggy Johnson, Clintonville Clerk

WISCONSIN
TROY E. HEWITT
S-2831
GREEN BAY
WI
LAND SURVEYOR

8/29/26

Robert E. Lee & Associates, Inc.
1250 Centennial Centre Blvd | Hobart, WI | 920-662-9641 | releeinc.com

R:\2400\2450\2450043\dwg\2450043_csm.dwg

SHEET 4 OF 4

V37 p114

Appendix

C

Construction Schedule

Keller, Inc.

89095 - Creative Converting - Addition, Project - 07/06/2026 - 09/28/2026

WBS	Name	% Co...	Status	Start	Finish	Duration	Company	Assignees Directory	Approvers Directory	Calendar	Deadline
1	Mobliize to site	0	OVERDUE	Jul 6, 2026	Jul 10, 2026	5 days					
2	**Pre construction** 4	0		**Jun 29, 2026**	**Jul 17, 2026**	**15 days**					
3	**Excavation** 10	0		**Jul 6, 2026**	**Jun 11, 2027**	**245 days**					
4	**Site utilities** 4	0		**Aug 19, 2026**	**Sep 4, 2026**	**13 days**					
5	**Concrete** 6	0		**Aug 3, 2026**	**May 21, 2027**	**210 days**					
6	**Masonry** 2	0		**Sep 8, 2026**	**Oct 9, 2026**	**24 days**					
7	**Building erection** 21	0		**Sep 8, 2026**	**Apr 2, 2027**	**149 days**					
8	**ovh door install** 2	0		**Dec 7, 2026**	**Apr 9, 2027**	**90 days**					
9	**aphalt** 3	0		**Oct 12, 2026**	**May 14, 2027**	**155 days**					
10	**Pre Cast/ mezz deck** 1	0		**Jan 25, 2027**	**Jan 26, 2027**	**2 days**					
11	Temp Heat	0	NOT ST...	Feb 8, 2027	Feb 8, 2027	1 day					
12	ground thaw	0	NOT ST...	Jan 18, 2027	Feb 26, 2027	30 days					
13	**MEP** 4	0		**Aug 20, 2026**	**May 21, 2027**	**197 days**					
14	**over roof exhaust** 3	0		**Nov 2, 2026**	**Feb 5, 2027**	**70 days**					
15	epoxy flooring	0	NOT ST...	Apr 12, 2027	Apr 16, 2027	5 days					
16	painting	0	NOT ST...	Mar 29, 2027	Apr 9, 2027	10 days					
17	doors/ partitions/ bath accy	0	NOT ST...	Apr 19, 2027	Apr 30, 2027	10 days					
18	punchlist	0	NOT ST...	May 10, 2027	May 21, 2027	10 days					
19	final inspections	0	NOT ST...	May 24, 2027	May 28, 2027	5 days					
20	turnover	0	NOT ST...	May 28, 2027	May 28, 2027	1 day					

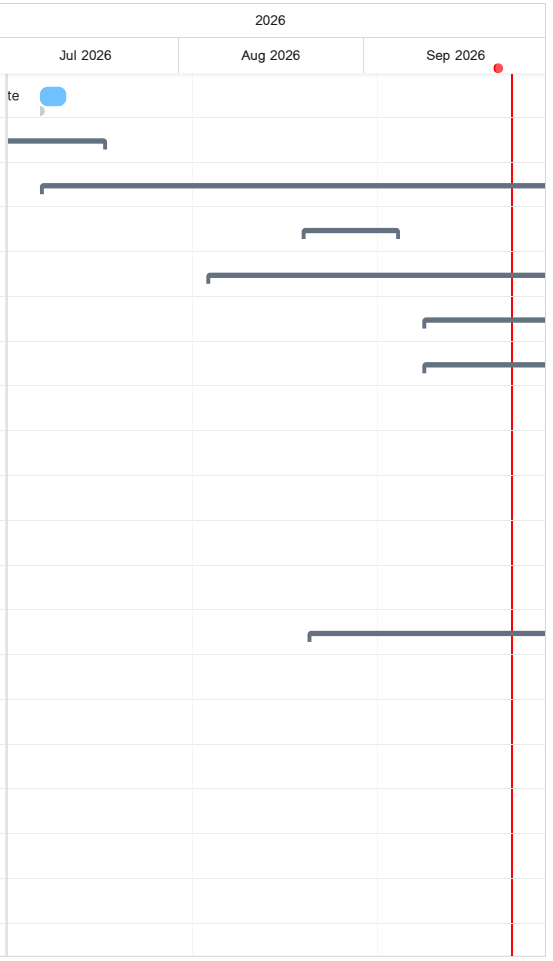

NOTE: Milestone schedule, schedule reflected may change due to site, material and or labor conditions.