City of Clintonville

Finance and Personnel Committee Meeting
50 10th Street
Clintonville, WI 54929
4:30 PM – Monday, October 12, 2026

Greg Rose
Tammy Strey-Hirt
Aimee Ebert

Jim Supanich
Brandon Braden

Agenda

1. Call to Order; Roll Call
2. Approval of Agenda
3. Citizens Forum – This is a chance for citizens to make comments. No action or lengthy discussions can take place as a result of comments made at this time.
4. Consent Agenda
    a. Approval of Minutes from September 8, 2026
    b. Operator's Licenses
5. Discussion/Possible Action
    a. Kenya's Family Restaurant, 27 S Main St - Consideration for extension for the Class B Beer & Liquor license due to a 90-day cessation of operations caused by flooding or a license revocation
    b. Financial Reports/Bills
    c. D/PA Complete a six-month trial with Vision Metering for AMI meter reading program
    d. Zoning Administration Proposal/Agreement
    e. 2027 Preliminary Proposed Fee Schedule
    f. Airport Lease Agreement - Jeff Reabe d/b/a Reabe Aircraft Improvement
    g. Airport Lease Agreement - Brett Revling d/b/a REVCO
    h. City Assessor Agreement
    i. Library Roof Repair
    j. Potential Housing Incentive Program
    k. Personnel Report
    l. Preliminary 2027 Budget and Capital Improvement Plan (CIP)

Posted: Clintonville City Hall - Clintonville Public Library - Community Center

Please note, upon reasonable notice, efforts will be made to accommodate the needs of disabled individuals through appropriate aids and services. For additional information or to request this service, contact City Hall at 715-823-7600

m. Discussion/Possible Action Regarding Line Painting Contract
n. Discussion/Possible Action Regarding Athletic Field Fencing Project
o. Discussion/Possible Action Regarding CAWS Site Lease
p. Discussion/Possible Action Regarding Aqua Park Shade Structure
q. 2025 Audit Update
r. Commercial Fields Housing Proposal

6. Next Meeting:
7. Adjournment

Greg Rose, Chairperson

This is to notify the public that a majority of the Council members may be present, however, no actual City Council action will be taken.

Posted: Clintonville City Hall - Clintonville Public Library - Community Center

Please note, upon reasonable notice, efforts will be made to accommodate the needs of disabled individuals through appropriate aids and services. For additional information or to request this service, contact City Hall at 715-823-7600

Posted: Clintonville City Hall - Clintonville Public Library - Community Center

Please note, upon reasonable notice, efforts will be made to accommodate the needs of disabled individuals through appropriate aids and services. For additional information or to request this service, contact City Hall at 715-823-7600

FINANCE & PERSONNEL COMMITTEE
Tuesday, September 8, 2026

Greg Rose called the regular meeting of the Finance Committee to order at 5:00 pm. Members present: Greg Rose, Jim Supanich, Tammy Strey-Hirt, Brandon Braden, and Aimee Ebert. Also Present: Mayor Jeannie Schley, Alderperson Darrell Hansen, City Administrator Craig Moser, Police Chief Craig Freitag, Fire Chief Shane Krueger, Public Works Director Justin Mc Auly, Bert Lehman-Tribune Gazette, and Clerk-Treasurer Peggy Johnson.

Strey-Hirt/Braden m/s/c to approve the agenda.

CONSENT AGENDA: Braden/Ebert m/s/c to approve the consent agenda.

a. August 10, 2026 minutes
b. Operator's licenses for Steve Anthofer, Gary Gordon, Julie Maulson, and Amy Powers
c. Extension of premise area for Clintonville Curling Club, 65 6th St on October 17, 2026

FINANCIAL REPORTS & BILLS: Braden/Supanich m/s/c u/roll call to recommend to the Common Council to approve the bills in the amount of $1,563,268.05.

BP BAR: Will discuss at Council with Attorney Steckbauer.

AIRPORT SEPTIC SYSTEM PROJECT: Moser updated that the quote for increase to 46,700 due to problems with the septic backing up into hangars.

AMBULANCE SERVICE SPECIAL REVENUE FUND: Supanich/Strey-Hirt m/s/c u/roll call to recommend to the Common Council to approve Resolution 2026-07 Establishing the City of Clintonville Ambulance Service Special Revenue Fund.

2026 BUDGET AMENDMENT: Discussion of the 2026 budget amendment included: Ehler's recommendation to use funds from the 2024 bond issue for the ambulance large capital items; general fund transfer into Fire & Rescue fund; and possible purchase price of Utility 7th St property.

2027 BUDGET OVERVIEW & TIMELINE: Moser distributed the 2027 budget overview & timeline. Discussion included: health insurance; expenditure restraint; mill rate; and net new construction anticipation for 2027.

ORGANIZATION CHANGES: The only anticipated organization change for 2027 is for an Airport Supervisor.

Strey-Hirt/Ebert m/s/c to adjourn at 5:39 pm.

Respectfully Submitted,

Peggy Johnson, Clerk-Treasurer

Operator's License Presented to Finance for Recommendation to Council for Approval by Clintonville Common Council on October 13th, 2026

- Buchholz, Susan
- Knowles, James
- St Germaine, Clorissa

The above applicants have been approved by the Police Department.

Finance & Personnel and Common Council
Meeting Date: 10/12/2026 and 10/13/26
Staff Report Number: 26-1-CT

Regular Business: Extension or Revocation of Kenya's Class B Beer & Liquor License

Background

Kenya's Family Restaurant, located at 27 S. Main St., has been closed since the April 2026 flooding. The business applied for and received its 2026–2027 license renewal, as the owner initially planned to reopen as soon as possible. At that time, the owners were also in the process of opening AJ's Supper Club, focusing efforts there so they could continue offering Kenya's food from that location during the morning/early afternoon hours.

Once cleanup efforts began at Kenya's, the extent of damage was found to be greater than anticipated. I spoke with the owner, Ismael Ayala Miguel, on September 24, 2026, and he indicated that he plans to reopen Kenya's by the end of 2026.

City ordinance 12.02(11) states:
(e) Commencement of Operations. Within 90 days after the issuance of a "Class A" retail liquor license or a "Class B" intoxicating liquor license or a Class "B" fermented malt beverage license, the licensee shall be open for business with adequate stock and equipment. Upon his failure to do business within such time, his license shall be subject to revocation by the council after a public hearing. The Council may, for a good cause shown, extend such 90 day period.

(f) Cessation of Operations. If any licensee shall suspend or cease doing business for 90 consecutive days or more, his "Class A" retail liquor license or his "Class B" intoxicating liquor license or his Class "B" fermented malt beverage license shall be subject to revocation by the Council after a public hearing. The Council may, for a good cause shown, extend such 90 day period. If a license is revoked under this provision Sec. 12.02 (15)(c) is not applicable.

Request

Ismael Ayala Miguel is requesting an extension of the license for Kenya's Family Restaurant to allow additional time to complete necessary repairs.

Report prepared by:
Peggy L Johnson

Distribution Summary

Category	Distribution	Amount
ADMINISTRATION	ADMINISTRATION FEES	30.00
ADMINISTRATION	BUSINESS LICENSES	115.00
ADMINISTRATION	CELL TOWER LEASE	3,248.35
ADMINISTRATION	COMMUNITY EVENT FEE	117.00
ADMINISTRATION	DOG LICENSES DUE TO COUNTY	15.00
ADMINISTRATION	NONBUSINESS LICENSES	45.00
ADMINISTRATION	PILT-ASTER	3,627.20
AR PAYMENT INV.	AR PAYMENT	110,748.02
BUILDING INSP/ASSESSOR	BUILDING PERMITS & INSPECTION	16,790.79
BUILDING INSP/ASSESSOR	ZONING APPEALS	200.00
FIRE DEPARTMENT	FIRE DUES/OTHER MUNICIPALITIES	6,858.17
LIBRARY	COPY MACHINE REVENUE	398.19
LIBRARY	DONATIONS-805	500.00
LIBRARY	LIBRARY FINES	174.55
LIBRARY	SALES TAX	21.91
PARK & REC DEPARTMENT	BOAT LAUNCH FEES	172.00
PARK & REC DEPARTMENT	CC FEES	2,052.16
PARK & REC DEPARTMENT	DONATIONS-201	1,750.00
PARK & REC DEPARTMENT	FALL PROGRAMS	681.73
PARK & REC DEPARTMENT	GRAVE OPEN/CLOSE	4,100.00
PARK & REC DEPARTMENT	HEADSTONE MARKING	75.00
PARK & REC DEPARTMENT	LOT SALE	625.00
PARK & REC DEPARTMENT	MISC REVENUE (100)	44.21
PARK & REC DEPARTMENT	PARK FEES	407.58
PARK & REC DEPARTMENT	POOL FEES & CONCESSIONS	2,565.40
PARK & REC DEPARTMENT	SALES TAX	281.11
PARK & REC DEPARTMENT	SOCCER FEES	3,435.07
POLICE DEPARTMENT	DOG POUND REVENUE	120.00
POLICE DEPARTMENT	FUNDRAISING-COMM POLICE EFFORT	487.00
POLICE DEPARTMENT	K-9 FUNDRAISING REVENUE	93.75
POLICE DEPARTMENT	LAW AND ORDINANCE VIOLATIONS	3,845.53
POLICE DEPARTMENT	LAW ENFORCEMENT FEES	209.95
POLICE DEPARTMENT	LAW ENFORCEMENT SERV/OTHER MU	346.08
POLICE DEPARTMENT	LICENSE PLATES PAYABLES	20,167.99
POLICE DEPARTMENT	MOTOR VEHICLE REGISTRATIONS	811.60
POLICE DEPARTMENT	PARKING VIOLATIONS	40.00
POLICE DEPARTMENT	SALES TAX	1.10
POLICE DEPARTMENT	WAUPACA CO FORFEITURES	20.26
STREET DEPARTMENT	CITY PROPERTY SALES	2,937.91
STREET DEPARTMENT	FLOWERS & FIRS DONATIONS	60.00
STREET DEPARTMENT	INSURANCE CLAIM RECOVERIES-100	2,228.20
STREET DEPARTMENT	MISCELLANEOUS REVENUES	557.67
STREET DEPARTMENT	SALES TAX	192.27
Grand Totals:		191,197.75

Report Criteria:
Report type: Summary

GL Period	Check Issue Date	Check Number	Vendor Number	Payee	Amount
09/26	09/09/2026	93807	20	A TO Z SIGNS & GRAPHICS	805.00
09/26	09/09/2026	93808	100237	ADAM'S SMALL ENGINE REPAIR	241.50
09/26	09/09/2026	93809	70007	ALLIANT ENERGY	952.92
09/26	09/09/2026	93810	103845	AMAZON CAPITAL SERVICES	4,240.56
09/26	09/09/2026	93811	102973	APEX FIRE PROTECTION LLC	340.00
09/26	09/09/2026	93812	103072	APPEAL DIGITAL IMAGE &	66.00
09/26	09/09/2026	93813	104124	AT&T MOBILITY II LLC	1,642.58
09/26	09/09/2026	93814	103386	AUTOMATED COMFORT CONTROLS	1,145.97
09/26	09/09/2026	93815	101239	BADGER LABORATORIES &	70.00
09/26	09/09/2026	93816	101047	BADGER POWER MKTG AUTHORITY	941,702.98
09/26	09/09/2026	93817	100224	BADGER SCALE INC	235.00
09/26	09/09/2026	93818	103125	BELCO VEHICLE SOLUTIONS LLC	10,083.40
09/26	09/09/2026	93819	104679	BE'S REFRESHMENTS INC	134.00
09/26	09/09/2026	93820	103110	BOARDMAN & CLARK LAW FIRM	3,277.50
09/26	09/09/2026	93821	104207	BOBCAT PLUS INC	23.84
09/26	09/09/2026	93822	101049	BORDER STATES INDUSTRIES INC	8,194.02
09/26	09/09/2026	93823	104898	CENGAGE LEARNING INC	91.50
09/26	09/09/2026	93824	102565	CENTER POINT LARGE PRINT	127.34
09/26	09/09/2026	93825	101056	CHARTER COMMUNICATIONS	627.24
09/26	09/09/2026	93826	104908	CHARTER COMMUNICATIONS	153.95
09/26	09/09/2026	93827	101998	CINTAS CORPORATION LOC 443	401.93
09/26	09/09/2026	93828	104685	CIVICPLUS LLC	4,515.00
09/26	09/09/2026	93829	830	CLINTONVILLE AREA CHAMBER	200.00
09/26	09/09/2026	93830	104729	CLINTONVILLE PLAZA LLC	104.00
09/26	09/09/2026	93831	1000	CLINTONVILLE UTILITIES	21,764.46
09/26	09/09/2026	93832	104276	COBORN'S INC	497.84
09/26	09/09/2026	93833	103207	CONWAY SHIELDS INC	1,254.50
09/26	09/09/2026	93834	104972	CR SHRED INC.	67.53
09/26	09/09/2026	93835	101181	CTW CORPORATION	29,520.00
09/26	09/09/2026	93836	3080	DEMCO INC	204.42
09/26	09/09/2026	93837	20020	DWD-UNEMPLOYMENT INSURANCE	52.42
09/26	09/09/2026	93838	6075	ELAN FINANCIAL SERVICES	7,379.38
09/26	09/09/2026	93839	103271	ELM USA INC	85.50
09/26	09/09/2026	93840	102982	EMERGENCY SERVICES MARKETING	305.00
09/26	09/09/2026	93841	103033	EMERGENCY VEHICLE SERVICES	2,682.37
09/26	09/09/2026	93842	101264	ENVIRONMENTAL RESOURCE ASSOC	705.09
09/26	09/09/2026	93843	101220	FOCUS ON ENERGY / SEERA	1,741.62
09/26	09/09/2026	93844	101086	FORSTER ELECTRICAL ENGINEERIN	2,397.50
09/26	09/09/2026	93845	103790	FOX VALLEY TECHNICAL COLLEGE	163.45
09/26	09/09/2026	93846	1217	FRONTIER COMMUNICATIONS CORP	576.17
09/26	09/09/2026	93847	104055	GFL ENVIRONMENTAL	512.00
09/26	09/09/2026	93848	103331	HARTER'S FOX VALLEY DISPOSAL	24,660.76
09/26	09/09/2026	93849	942	HAWKINS INC	4,895.16
09/26	09/09/2026	93850	104961	HD ELECTRONICS INC	946.64
09/26	09/09/2026	93851	104572	HIDDE CONCRETE LLC	5,729.00
09/26	09/09/2026	93852	10170	IMMEL EXCAVATING INC, RJ	3,250.50
09/26	09/09/2026	93853	105054	INNOVATIVE PUBLIC ADVISORS	7,375.00
09/26	09/09/2026	93854	104709	JAMES IMAGING SYSTMES INC	259.16
09/26	09/09/2026	93855	1361	JEFFERSON FIRE & SAFETY INC	10,046.66
09/26	09/09/2026	93856	105089	JENVINICA LLC	40.71

M = Manual Check, V = Void Check

GL Period	Check Issue Date	Check Number	Vendor Number	Payee	Amount
09/26	09/09/2026	93857	103027	KUETTEL'S SEPTIC SERVICE	275.00
09/26	09/09/2026	93858	103798	KUNKEL ENGINEERING GROUP	4,733.00
09/26	09/09/2026	93859	102435	MABAS DIVISION 142	100.00
09/26	09/09/2026	93860	102752	MCCLONE	124,389.00
09/26	09/09/2026	93861	103169	MED COMPASS	3,860.00
09/26	09/09/2026	93862	103443	MID STATE TREE SERVICE LLC	3,825.00
09/26	09/09/2026	93863	614	MIDWEST TAPE LLC	455.33
09/26	09/09/2026	93864	101159	MIDWEST WORKWEAR	2,050.24
09/26	09/09/2026	93865	10667	MONROE TRUCK EQUIPMENT INC	15.00
09/26	09/09/2026	93866	352	MSA PROFESSIONAL SERVICES INC	28,748.57
09/26	09/09/2026	93867	940	MULTI MEDIA CHANNELS LLC	272.19
09/26	09/09/2026	93868	102491	NAPA AUTO PARTS	129.20
09/26	09/09/2026	93869	10860	NCL OF WISCONSIN INC	666.14
09/26	09/09/2026	93870	104950	NORTHERN COMPRESSOR	516.15
09/26	09/09/2026	93871	101161	NORTHERN LAKE SERVICE INC.	857.80
09/26	09/09/2026	93872	101410	O'REILLY AUTO PARTS	638.15
09/26	09/09/2026	93873	10960	PACKER CITY INTL TRUCKS INC	425.46
09/26	09/09/2026	93874	100695	PETERS CONCRETE	7,305.00
09/26	09/09/2026	93875	11063	PETTY CASH	57.20
09/26	09/09/2026	93876	10570	PETTY CASH-CLINTONVILLE LIBRAR	60.54
09/26	09/09/2026	93877	105095	PLAGEMANN, HEIDI	32.00
09/26	09/09/2026	93878	12040	POMASL FIRE EQUIPMENT	5,000.00
09/26	09/09/2026	93879	12043	POMP'S TIRE SERVICE INC	865.86
09/26	09/09/2026	93880	103236	PREMIUM WATERS INC	11.00
09/26	09/09/2026	93881	101119	PUBLIC SERVICE COMMISSION	180.51
09/26	09/09/2026	93882	103842	QUADIENT LEASING USA INC	1,509.60
09/26	09/09/2026	93883	104014	RASMUSSEN, LAUREN	30.00
09/26	09/09/2026	93884	103576	RIESTERER & SCHNELL INC	405.16
09/26	09/09/2026	93885	782	RIVERSIDE GOLF CLUB	6,936.60
09/26	09/09/2026	93886	102334	ROCK OIL REFINING INC	100.00
09/26	09/09/2026	93887	104525	RUNNING INC	9,055.37
09/26	09/09/2026	93888	16050	SERVICE MOTOR COMPANY	18,180.16
09/26	09/09/2026	93889	16073	SHAWANO MUNICIPAL UTILITIES	3,057.98
09/26	09/09/2026	93890	102783	SPEE-DEE DELIVERY SERVICE INC	19.79
09/26	09/09/2026	93891	102922	SPIEGELBERG IMPLEMENT INC	119.36
09/26	09/09/2026	93892	2075	STERLING WATER INC	32.70
09/26	09/09/2026	93893	104228	TECHNICAL SAFETY SERVICES LLC	613.32
09/26	09/09/2026	93894	104917	THE VAULT: CLINTONVILLE LLC	1,360.00
09/26	09/09/2026	93895	1479	THEDACARE AT WORK	222.00
09/26	09/09/2026	93896	103049	THEDACARE LABORATORIES	42.50
09/26	09/09/2026	93897	104570	TONY'S CEMETERY SERVICE	6,080.00
09/26	09/09/2026	93898	19020	TORBORGS LUMBER & SUPPLY	108.92
09/26	09/09/2026	93899	86	TOTAL ENERGY SYSTEMS LLC	8,926.91
09/26	09/09/2026	93900	103255	TRANSCENDENT TECHNOLOGIES	333.00
09/26	09/09/2026	93901	103250	UHS PREMIUM BILLING	83,475.21
09/26	09/09/2026	93902	103296	UNIQUE MANAGEMENT SERVICES IN	108.35
09/26	09/09/2026	93903	102784	UNITED MAILING SERVICES INC	2,303.16
09/26	09/09/2026	93904	102552	US BANK EQUIPMENT FINANCE	836.71
09/26	09/09/2026	93905	20098	USA BLUE BOOK	225.25
09/26	09/09/2026	93906	102348	VIRGINIA TRANSFORMER CORP	116,644.80
09/26	09/09/2026	93907	50082	WAUPACA COUNTY FIRE ASSOC	75.00
09/26	09/09/2026	93908	60007	WAUPACA COUNTY TREASURER	1,563.32
09/26	09/09/2026	93909	102100	WAUPACA COUNTY TREASURER	100.00

M = Manual Check, V = Void Check

GL Period	Check Issue Date	Check Number	Vendor Number	Payee	Amount
09/26	09/09/2026	93910	101258	WESCO RECEIVABLES CORP.	5,105.00
09/26	09/09/2026	93911	60053	WI DEPT OF JUSTICE (L6901T)	28.00
09/26	09/09/2026	93912	60068	WISCONSIN DEPT OF TRANSPORTATI	11.63
09/26	09/09/2026	93913	102946	WOLF RIVER LAWYERS SC	3,654.50
09/26	09/22/2026	93914	103845	AMAZON CAPITAL SERVICES	536.46
09/26	09/22/2026	93915	101056	CHARTER COMMUNICATIONS	2,605.85
09/26	09/22/2026	93916	20081	FRONTIER COMMUNICATIONS	451.12
09/26	09/22/2026	93917	102546	KWIK TRIP INC	7,187.01
09/26	09/22/2026	93918	103842	QUADIENT LEASING USA INC	222.90
09/26	09/22/2026	93919	102552	US BANK EQUIPMENT FINANCE	885.47
09/26	09/22/2026	93920	60083	WE ENERGIES	574.97
09/26	09/22/2026	93921	60030	WI DEPT OF REVENUE-SALES TAX	9,323.97
Grand Totals:					1,585,009.46

Report Criteria:
Report type: Summary

M = Manual Check, V = Void Check

CITY OF CLINTONVILLE
PAYROLL DISBURSEMENTS
SEPTEMBER 2026

Payroll-Direct Deposit	9/11/2026	91126001-91126082		103,491.52
Payroll Transmittals-Checks	9/11/2026	38514-38518		4,663.41
Payroll Transmittals-Electronic	9/11/2026	91126083-91126084		39,117.11
Payroll-Direct Deposit	9/18/2026	91826001-9186003		4,172.67
Payroll Transmittals-Checks	9/18/2026	-		-
Payroll Transmittals-Electronic	9/18/2026	91826004-9186005		1,973.79
Payroll-Direct Deposit	9/25/2026	92526001-92526101		110,024.42
Payroll Transmittals-Checks	9/25/2026	38519-38524		6,560.65
Payroll Transmittals-Electronic	9/25/2026	92526102-92526104		90,274.07
			$	360,277.64

Report Criteria:
Detail report.
Invoices with totals above $0 included.
Only unpaid invoices included.

Vendor Name	Invoice Number	Description	Invoice Date	Net Invoice Amount
100				
100-10-44100 BUSINESS LICENSES				
JOHN R ERNST JR	82726-REFUN	REFUND-OPERATOR'S LICENSE	08/27/2026	25.00
Total 100-10-44100 BUSINESS LICENSES:				25.00
100-10-51101-3150 OFFICE SUPPLIES				
TROPHIES & TREASURES	1768	NAMEPLATE-D JOHNSON	09/16/2026	10.00
Total 100-10-51101-3150 OFFICE SUPPLIES:				10.00
100-10-51102-3161 TRAINING				
ELAN FINANCIAL SERVICES	73-82426	WREEA CONFERENCE	08/24/2026	175.00
Total 100-10-51102-3161 TRAINING:				175.00
100-10-51301-1100 SALARIES				
WOLF RIVER LAWYERS SC	OCTOBER 202	OCTOBER 2026	10/01/2026	3,398.68
Total 100-10-51301-1100 SALARIES:				3,398.68
100-10-51301-2350 LEGAL SRVS OUTSIDE/CONTRACT				
WOLF RIVER LAWYERS SC	5252	LEGAL SERVICES NOT IN CONTRACT	09/11/2026	1,512.50
Total 100-10-51301-2350 LEGAL SRVS OUTSIDE/CONTRACT:				1,512.50
100-10-51410-2100 INFORMATION TECHNOLOGY				
INTEGRATED SOLUTIONS INC	37009	COMPUTER MONITOR	09/30/2026	185.00
INTEGRATED SOLUTIONS INC	CW-31517	SEPTEMBER 2026 MANAGED SERVICES	09/14/2026	5.50
INTEGRATED SOLUTIONS INC	CW-31605	OCTOBER 2026 MANAGED SERVICES	10/07/2026	5.50
Total 100-10-51410-2100 INFORMATION TECHNOLOGY:				196.00
100-10-51420-2100 INFORMATION TECHNOLOGY				
CHARTER COMMUNICATIONS	171723301092	OCTOBER 2026 INTERNET	09/21/2026	71.10
Total 100-10-51420-2100 INFORMATION TECHNOLOGY:				71.10
100-10-51420-2250 TELEPHONE				
AT&T MOBILITY II LLC	287305595089	250-0220	09/11/2026	45.61
AT&T MOBILITY II LLC	287305595089	250-0107	09/11/2026	37.27
Total 100-10-51420-2250 TELEPHONE:				82.88
100-10-51420-3130 DUPLICATION & COPIES				
US BANK EQUIPMENT FINANCE	592289797	COPIER LEASE	10/01/2026	167.00
US BANK EQUIPMENT FINANCE	592289797	COPIES, B/W & COLOR	10/01/2026	192.35
Total 100-10-51420-3130 DUPLICATION & COPIES:				359.35
100-10-51420-3150 OFFICE SUPPLIES				
ELAN FINANCIAL SERVICES	92426	6 WINDOW ENVELOPES, 2 ENVELOPES STAMPED	09/24/2026	3,767.80
PETTY CASH	SEPTEMBER 2	9/22/26 FD POSTAGE	09/30/2026	8.75

Vendor Name	Invoice Number	Description	Invoice Date	Net Invoice Amount
AMAZON CAPITAL SERVICES	1CTR-V6KL-LY	TONER CARTRIDGE, BINDER CLIPS, NCR PAPER, PENS, MARK	10/03/2026	291.18
Total 100-10-51420-3150 OFFICE SUPPLIES:				4,067.73
100-10-51420-3260 SUBSCRIPTIONS & PERIODICALS				
ELAN FINANCIAL SERVICES	21908	TRIBUNE GAZETTE SUBSCRIPTION	09/18/2026	73.00
Total 100-10-51420-3260 SUBSCRIPTIONS & PERIODICALS:				73.00
100-10-51420-3261 PUBLISHING				
MULTI MEDIA CHANNELS LLC	17123	COUNCIL MINUTES 7/8/26	08/31/2026	30.94
MULTI MEDIA CHANNELS LLC	17123	MINUTES 6/9/26	08/31/2026	198.11
MULTI MEDIA CHANNELS LLC	17123	PUBLIC HEARING 8/31/26 ST MARTIN'S	08/31/2026	27.61
Total 100-10-51420-3261 PUBLISHING:				256.66
100-10-51420-3490 OPERATING EXPENSES				
PETTY CASH	SEPTEMBER 2	LAMINATION	09/30/2026	1.00-
WAUPACA COUNTY REGISTER	30 26 78 49	SATISFACTION SP ASSESSMENT 30-26-78-49 SCHOENFELD	09/15/2026	30.00
WAUPACA COUNTY REGISTER	30 26 78 50	SATISFACTION SP ASSESSMENT 30-26-78-50 DEPEW	09/03/2026	30.00
WAUPACA COUNTY REGISTER	30 26 80 30	SATISFACTION SP ASSESSMENT 30-26-80-30 BROWN	09/03/2026	30.00
WAUPACA COUNTY REGISTER	30 26 80 9	SATISFACTION SP ASSESSMENT 30-26-80-9 NUSSBAUM	09/03/2026	30.00
WAUPACA COUNTY REGISTER	30-26-79-24	SATISFACTION SP ASSESSMENT 30-26-79-24 HUEBNER	09/03/2026	30.00
US BANK EQUIPMENT FINANCE	592289797	LATE FEES	10/01/2026	30.28
Total 100-10-51420-3490 OPERATING EXPENSES:				179.28
100-10-51440-3150 OFFICE SUPPLIES				
INTEGRATED SOLUTIONS INC	37009	COMPUTER MONITORS-DEP CLERK	09/30/2026	370.00
AMAZON CAPITAL SERVICES	1CTR-V6KL-LY	MONITOR STAND, TAPE DISPENSER & TAPE, SLIDER BAGS	10/03/2026	75.27
Total 100-10-51440-3150 OFFICE SUPPLIES:				445.27
100-10-51450-2100 COMPUTERS/DATA PROC				
INTEGRATED SOLUTIONS INC	CW-31517	SEPTEMBER 2026 MANAGED SERVICES	09/14/2026	254.43
INTEGRATED SOLUTIONS INC	CW-31517	SEPTEMBER 2026 MANAGED SERVICES	09/14/2026	5.50
INTEGRATED SOLUTIONS INC	CW-31605	OCTOBER 2026 MANAGED SERVICES	10/07/2026	254.43
INTEGRATED SOLUTIONS INC	CW-31605	OCTOBER 2026 MANAGED SERVICES	10/07/2026	5.50
Total 100-10-51450-2100 COMPUTERS/DATA PROC:				519.86
100-10-51510-2220 AUDITING - PROF				
CLIFTONLARSONALLEN LLP	L261576342	2025 AUDIT PROGRESS BILLING	09/16/2026	1,989.10
Total 100-10-51510-2220 AUDITING - PROF:				1,989.10
100-10-51601-2250 TELEPHONE				
AT&T MOBILITY II LLC	287305595089	250-5320	09/11/2026	1.29
Total 100-10-51601-2250 TELEPHONE:				1.29
100-10-51601-2270 WATER & ELECTRIC				
CLINTONVILLE UTILITIES	3-0160-00 9/26	WATER & ELECTRIC - CITY HALL	09/30/2026	244.27
Total 100-10-51601-2270 WATER & ELECTRIC:				244.27
100-10-51601-3490 OPERATING EXPENSES				
GFL ENVIRONMENTAL	R10000226446	GARBAGE/RECYCLING SERVICE: CITY HALL	09/17/2026	15.14

Vendor Name	Invoice Number	Description	Invoice Date	Net Invoice Amount
Total 100-10-51601-3490 OPERATING EXPENSES:				15.14
100-10-51601-3560 BLDG. REPAIR & MAINTENANCE				
ELAN FINANCIAL SERVICES	0140-82426	AJAX DISH SOAP	08/24/2026	2.99
TORBORGS LUMBER & SUPPLY	2607-566539	FILL VALVE & TWO INCH FLAPPER	07/23/2026	17.99
TORBORGS LUMBER & SUPPLY	2609-594890	(1GAL) HL WONDER KOT LATEX SEMI-GLOSS PAINT	09/23/2026	41.59
TORBORGS LUMBER & SUPPLY	2609-594990	(1QT) HL WONDER KOTE LATEX SEMI-GLOSS PAINT	09/23/2026	16.89
Total 100-10-51601-3560 BLDG. REPAIR & MAINTENANCE:				79.46
100-10-56300-2300 CONTRACTED SERVICES				
MSA PROFESSIONAL SERVICE	032102	MSA INTERIM ADMINISTRATION	08/20/2026	27,443.45
MSA PROFESSIONAL SERVICE	033042	MSA INTERIM ADMINISTRATION	09/15/2026	5,006.00
Total 100-10-56300-2300 CONTRACTED SERVICES:				32,449.45
100-11-51530-2300 CONTRACTED SERVICES				
SERVI GROUP INC	CLINT202603	ASSESSOR SERVICE-MAINTENANCE Q3	10/06/2026	6,275.00
KUNKEL ENGINEERING GROUP	8/31/2026	BUILDING INSPECTOR SRVCS - KUNKEL	08/31/2026	1,516.78
Total 100-11-51530-2300 CONTRACTED SERVICES:				7,791.78
100-11-51530-3150 OFFICE SUPPLIES				
DIGGERS HOTLINE INC	260 7 11402	CITY HALL	07/31/2026	51.00
DIGGERS HOTLINE INC	260 8 11402	CITY HALL	08/31/2026	50.27
DIGGERS HOTLINE INC	260 9 11402	CITY HALL	09/30/2026	45.47
Total 100-11-51530-3150 OFFICE SUPPLIES:				146.74
100-20-51601-2250 TELEPHONE				
AT&T MOBILITY II LLC	287305595089	250-5320	09/11/2026	.97
Total 100-20-51601-2250 TELEPHONE:				.97
100-20-51601-2270 WATER & ELECTRIC				
CLINTONVILLE UTILITIES	3-0050-01 9/26	WATER & ELECTRIC - POLICE STATION	09/30/2026	933.95
Total 100-20-51601-2270 WATER & ELECTRIC:				933.95
100-20-51601-3490 OPERATING EXPENSES				
GFL ENVIRONMENTAL	R10000226446	GARBAGE/RECYCLING SERVICE: POLICE STATION	09/17/2026	15.14
Total 100-20-51601-3490 OPERATING EXPENSES:				15.14
100-20-52101-2100 INFORMATION TECHNOLOGY				
FRONTIER COMMUNICATIONS	08360711-S-26	MONTHLY INTRASTATE BILL	09/25/2026	288.00
FRONTIER COMMUNICATIONS	118-101-0208-	T-1 LINE	10/01/2026	31.26
CHARTER COMMUNICATIONS	237040901092	FAX-PD	09/21/2026	49.75
INTEGRATED SOLUTIONS INC	CW-31517	SEPTEMBER 2026 MANAGED SERVICES	09/14/2026	289.60
INTEGRATED SOLUTIONS INC	CW-31605	OCTOBER 2026 MANAGED SERVICES	10/07/2026	289.60
Total 100-20-52101-2100 INFORMATION TECHNOLOGY:				948.21
100-20-52101-2250 TELEPHONE				
AT&T MOBILITY II LLC	287305595089	PD PHONES	09/11/2026	275.00
AT&T MOBILITY II LLC	287305595089	460-1237	09/11/2026	36.24
AT&T MOBILITY II LLC	287305595089	460-1348	09/11/2026	36.24

Vendor Name	Invoice Number	Description	Invoice Date	Net Invoice Amount
AT&T MOBILITY II LLC	287305595089	460-1349	09/11/2026	33.24
AT&T MOBILITY II LLC	287305595089	460-1362	09/11/2026	36.24
AT&T MOBILITY II LLC	287305595089	460-1363	09/11/2026	36.24
AT&T MOBILITY II LLC	287305595089	460-1364	09/11/2026	36.24
AT&T MOBILITY II LLC	287305595089	863-1005	09/11/2026	36.24
AT&T MOBILITY II LLC	287305595089	863-1819	09/11/2026	36.25
Total 100-20-52101-2250 TELEPHONE:				561.93
100-20-52101-3150 OFFICE SUPPLIES				
ELAN FINANCIAL SERVICES	0267908-IN	SQUAD PRINTER PAPER	09/09/2026	165.60
TORBORGS LUMBER & SUPPLY	2609-595783	KEYS MADE FOR PD	09/24/2026	9.95
AMAZON CAPITAL SERVICES	17X7-M1F1-DX	OFFICE SUPPLIES	09/24/2026	50.56
METRO SALES INC	INV3181893	PD MONTHLY COPIER BILL	09/08/2026	109.25
Total 100-20-52101-3150 OFFICE SUPPLIES:				335.36
100-20-52101-3161 TRAINING EXPENSES				
CLINTONVILLE ROTARY CLUB	JULY/AUGUST	FREITAG ROTARY	08/31/2026	50.00
ASCENT CONSULTING LLC	26-066	WELNESS CHECK AFTER CRITICAL INCIDENT (TB TF)	09/04/2026	340.00
FIELD TRAINING SOLUTIONS	10377	FTO TRAINING (PRICE GLOEDE SCHOEN)	09/21/2026	885.00
Total 100-20-52101-3161 TRAINING EXPENSES:				1,275.00
100-20-52101-3163 HIRING & TESTING				
THEDACARE AT WORK	390072	DRUG TEST PHYSICAL	09/22/2026	260.00
Total 100-20-52101-3163 HIRING & TESTING:				260.00
100-20-52101-3481 INVESTIGATIONS				
THEDACARE LABORATORIES	12100522 8/26	OWI BLOOD DRAWS	08/31/2026	42.50
AT&T MOBILITY II LLC	287305595089	460-1212	09/11/2026	36.24
Total 100-20-52101-3481 INVESTIGATIONS:				78.74
100-20-52101-3490 OTHER OPERATING EXPENSES				
STERLING WATER INC	356X04486802	MONTHLY CULLIGAN WATER BILL	09/30/2026	32.70
Total 100-20-52101-3490 OTHER OPERATING EXPENSES:				32.70
100-20-52101-3510 GAS & OIL				
KWIK TRIP INC	SEPTEMBER 2	POLICE	09/30/2026	2,428.45
Total 100-20-52101-3510 GAS & OIL:				2,428.45
100-20-52101-3554 VEHICLE REPAIR/MAINTENANCE				
BELCO VEHICLE SOLUTIONS L	11985	SQUAD LIGHT REPLACEMENT	09/15/2026	129.00
Total 100-20-52101-3554 VEHICLE REPAIR/MAINTENANCE:				129.00
100-20-54109-3490 OPERATING EXPENSES				
CLINTONVILLE UTILITIES	12-0870-00-09-	DOG POUND	09/30/2026	30.87
ELAN FINANCIAL SERVICES	3079-82926	CAT LITTER FOR POUND	08/29/2026	20.99
ELAN FINANCIAL SERVICES	4879-92226	CAT LITTER FOR POUND	09/22/2026	23.98
GFL ENVIRONMENTAL	R10000224020	POUND GARBAGE	09/17/2026	82.80
CLINTONVILLE HOMETOWN VE	42067	VET BILLS FOR POUND ANIMALS	12/16/2025	173.00
CLINTONVILLE HOMETOWN VE	43014	VET BILL FOR CAT IN POUND	01/08/2026	110.25
CLINTONVILLE HOMETOWN VE	43039	VET BILL FOR POUND ANIMALS	01/09/2026	133.75

Vendor Name	Invoice Number	Description	Invoice Date	Net Invoice Amount
CLINTONVILLE HOMETOWN VE	47655	VET BILLS FOR POUND ANIMALS	05/03/2026	85.10
CLINTONVILLE HOMETOWN VE	47670	VET BILL FOR ANIMALS IN POUND	05/04/2026	98.33
CLINTONVILLE HOMETOWN VE	47747	VET BILL FOR ANIMALS IN THE POUND	05/05/2026	9.07
CLINTONVILLE HOMETOWN VE	48060	VET BILL FOR POUND ANIMAL	05/11/2026	9.13
Total 100-20-54109-3490 OPERATING EXPENSES:				777.27
100-21-51601-2250 TELEPHONE				
AT&T MOBILITY II LLC	287305595089	250-5320	09/11/2026	.32
Total 100-21-51601-2250 TELEPHONE:				.32
100-21-51601-2270 WATER & ELECTRIC				
CLINTONVILLE UTILITIES	3-0160-00 9/26	WATER & ELECTRIC - FIRE STATION	09/30/2026	569.97
Total 100-21-51601-2270 WATER & ELECTRIC:				569.97
100-21-51601-3490 OPERATING EXPENSES				
GFL ENVIRONMENTAL	R10000226446	GARBAGE/RECYCLING SERVICE: FIRE STATION	09/17/2026	15.14
Total 100-21-51601-3490 OPERATING EXPENSES:				15.14
100-21-51601-3560 BLDG. REPAIR/MAINTENANCE				
ELAN FINANCIAL SERVICES	0325-82726	(4) ELBOW	08/27/2026	9.36
ELAN FINANCIAL SERVICES	8020-91726	PLUG, SHOWER HEAD	09/17/2026	33.78
ELAN FINANCIAL SERVICES	WH45879116	SHOWER HEAD	09/21/2026	8.00
TORBORGS LUMBER & SUPPLY	2609-592531	EXTENSION TUBES, WING NUTS, NUT WASHER	09/17/2026	21.26
TORBORGS LUMBER & SUPPLY	2609-592566	RETURN EXTENSION TUBES, WING NUTS, NUT WASHER	09/17/2026	21.26-
ZIMDARS HARDWARE INC	38829	LAV DRAIN ASSEMBLY - CHROME & EXTENSION TUBE	09/25/2026	77.95
Total 100-21-51601-3560 BLDG. REPAIR/MAINTENANCE:				129.09
100-21-52201-2100 INFORMATION TECHNOLOGY				
CHARTER COMMUNICATIONS	171723301092	OCTOBER 2026 INTERNET	09/21/2026	35.55
INTEGRATED SOLUTIONS INC	CW-31517	SEPTEMBER 2026 MANAGED SERVICES	09/14/2026	98.10
INTEGRATED SOLUTIONS INC	CW-31605	OCTOBER 2026 MANAGED SERVICES	10/07/2026	98.10
Total 100-21-52201-2100 INFORMATION TECHNOLOGY:				231.75
100-21-52201-2300 CONTRACTED SERVICES				
AT&T MOBILITY II LLC	287311684721	IPADS	09/07/2026	535.63
Total 100-21-52201-2300 CONTRACTED SERVICES:				535.63
100-21-52201-3135 SIREN MAINTENANCE				
CLINTONVILLE UTILITIES	12-0990-00 9/2	FD SIREN	09/30/2026	8.62
CLINTONVILLE UTILITIES	15-0940-00 9/2	FD SIREN	09/30/2026	8.62
CLINTONVILLE UTILITIES	16-0101-00 9/2	FD SIREN	09/30/2026	8.62
Total 100-21-52201-3135 SIREN MAINTENANCE:				25.86
100-21-52201-3163 HIRING & TESTING				
THEDACARE AT WORK	389152	FD PHYSICAL	09/01/2026	317.00
THEDACARE AT WORK	389161	FD PHYSICAL	09/01/2026	317.00
Total 100-21-52201-3163 HIRING & TESTING:				634.00

Vendor Name	Invoice Number	Description	Invoice Date	Net Invoice Amount
100-21-52201-3460 CLOTHING & UNIFORMS				
NELSON TACTICAL LLC	27631	CLASS A TIES	07/24/2026	245.76
Total 100-21-52201-3460 CLOTHING & UNIFORMS:				245.76
100-21-52201-3510 GAS & OIL				
KWIK TRIP INC	SEPTEMBER 2	FIRE	09/30/2026	913.52
Total 100-21-52201-3510 GAS & OIL:				913.52
100-21-52201-3554 VEHICLE REPAIR & MAINTENANCE				
EMERGENCY VEHICLE SERVIC	735	FOAM - FIREFIGHTING	10/01/2026	1,292.14
Total 100-21-52201-3554 VEHICLE REPAIR & MAINTENANCE:				1,292.14
100-21-52201-3555 RADIO REPAIR & MAINTENANCE				
NCI COMMUNICATION SOLUTIO	AR41250	PAGERS	05/26/2026	3,150.00
Total 100-21-52201-3555 RADIO REPAIR & MAINTENANCE:				3,150.00
100-21-52201-3557 EQUIPMENT REPAIR & MAINTENANCE				
JEFFERSON FIRE & SAFETY IN	IN341555	SCBA REPAIR	06/22/2026	2,897.00
Total 100-21-52201-3557 EQUIPMENT REPAIR & MAINTENANCE:				2,897.00
100-21590 OTHER DEDUCTIONS PAYABLE				
AT&T MOBILITY II LLC	287305595089	250-0358	09/11/2026	24.00
Total 100-21590 OTHER DEDUCTIONS PAYABLE:				24.00
100-24213 SALES TAX DUE STATE				
LAMBERG, NIKKI	100726-REFU	SOCCER COACHING REFUND	10/07/2026	2.72
CARLSEN, ALEXUS	100726-REFU	SOCCER COACH REFUND	10/07/2026	2.08
HOLBROOK, KATIE	93026	COED VOLLEYBALL REFUND - KATIE HOLBROOK	09/30/2026	2.61
ZILL, LISHA	100726-REFU	SOCCER COACHING REFUND - LISHA ZILL	10/07/2026	3.65
SCHROEDER, LIZ	100726-REFU	SOCCER COACHING REFUND - LIZ SCHROEDER	10/07/2026	2.19
POPPE, AMBER	100726-REFU	SOCCER COACHING REFUND - AMBER POPPE	10/07/2026	1.82
ZIEREIS, JENNIFER	100726-REFU	SOCCER COACHING REFUND - JENNIFER ZIEREIS	10/07/2026	3.65
RYDZEWSKI, EMILY	100726-REFU	SOCCER COACH REFUND	10/07/2026	1.88
OTTO, TIM	100726-REFU	SOCCER COACHING REFUND - TIM OTTO	10/07/2026	2.12
O'CONNOR, LIZZY	100726-REFU	SOCCER COACHING REFUND - LIZZY OCONNOR	10/07/2026	1.82
NETZEL, FAUNDA	100726-REFU	SOCCER COACHING REFUND - FAUNDA NIETZEL	10/07/2026	3.54
CONRADT, STACEY	100726-REFU	SOCCER COACHING REFUND - STACY CONRADT	10/07/2026	2.72
HESSE, JENNA	100726-REFU	SOCCER COACHING REFUND	10/07/2026	1.82
DOORNINK, TURNER	100726-REFU	SOCCER COACHING REFUND	10/07/2026	.27
MATTES, ZHENYA	100126-REFU	COMMUNITY CENTER REFUND - ZHIENYA MATTES	10/01/2026	4.95
RIPP, HEATHER	100726-REFU	SOCCER COACHING REFUND	10/07/2026	2.72
RUBIO, SAMANTHA	100726-REFU	SOCCER COACH REFUND - SAMANTHA RUBIO	10/07/2026	1.30
Total 100-24213 SALES TAX DUE STATE:				41.86
100-30-53202-2100 INFORMATION TECHNOLOGY				
CHARTER COMMUNICATIONS	171724601092	INTERNET SERVICE - STREET GARAGE	09/21/2026	10.80
CHARTER COMMUNICATIONS	000131709152	INTERNET SERVICE - PARKS OFFICE	09/15/2026	38.49
Total 100-30-53202-2100 INFORMATION TECHNOLOGY:				49.29

Vendor Name	Invoice Number	Description	Invoice Date	Net Invoice Amount
100-30-53202-2250 TELEPHONE				
AT&T MOBILITY II LLC	287305595089	250-0216	09/11/2026	14.49
Total 100-30-53202-2250 TELEPHONE:				14.49
100-30-53202-3150 OFFICE SUPPLIES				
AMAZON CAPITAL SERVICES	1X9Q-JPDN-7	BROTHER TN227BK HIGH YIELD TONER	09/17/2026	91.48
Total 100-30-53202-3150 OFFICE SUPPLIES:				91.48
100-30-53230-2100 INFORMATION TECHNOLOGY				
CHARTER COMMUNICATIONS	171724601092	INTERNET SERVICE - STREET GARAGE	09/21/2026	109.19
INTEGRATED SOLUTIONS INC	CW-31517	SEPTEMBER 2026 MANAGED SERVICES	09/14/2026	195.90
INTEGRATED SOLUTIONS INC	CW-31605	OCTOBER 2026 MANAGED SERVICES	10/07/2026	195.90
Total 100-30-53230-2100 INFORMATION TECHNOLOGY:				500.99
100-30-53230-2250 TELEPHONE				
AT&T MOBILITY II LLC	287305595089	460-1732	09/11/2026	30.11
Total 100-30-53230-2250 TELEPHONE:				30.11
100-30-53230-2270 WATER & ELECTRIC				
CLINTONVILLE UTILITIES	5-1000-00 9/26	WATER & ELECTRIC - DPW (STREET GARAGE)	09/30/2026	557.46
Total 100-30-53230-2270 WATER & ELECTRIC:				557.46
100-30-53230-3310 EXPENSE ALLOWANCES				
THEDACARE AT WORK	389019	RA: DS CRL DOT BUNDLED (84.00); ALCOHOL SCREENING (44.0	09/01/2026	2.56
Total 100-30-53230-3310 EXPENSE ALLOWANCES:				2.56
100-30-53230-3490 OPERATING EXPENSES				
GFL ENVIRONMENTAL	R10000226446	GARBAGE/RECYCLING SERVICE: STREET GARAGE	09/17/2026	15.14
Total 100-30-53230-3490 OPERATING EXPENSES:				15.14
100-30-53230-3560 BLDG REPAIR & MAINTENANCE				
TORBORGS LUMBER & SUPPLY	2609-591928	(3) ALL PURPOSE SEALANT	09/16/2026	29.97
CINTAS CORPORATION LOC 44	4281634891	RED SHOP TOWEL	09/08/2026	17.68
Total 100-30-53230-3560 BLDG REPAIR & MAINTENANCE:				47.65
100-30-53240-3310 EXPENSE ALLOWANCE				
THEDACARE AT WORK	389019	RA: DS CRL DOT BUNDLED (84.00); ALCOHOL SCREENING (44.0	09/01/2026	3.84
CINTAS CORPORATION LOC 44	4281634891	MECHANIC UNIFORMS	09/08/2026	29.55
CINTAS CORPORATION LOC 44	4282263741	MECHANIC UNIFORMS	09/14/2026	29.55
CINTAS CORPORATION LOC 44	4283868792	MECHANIC UNIFORMS	09/28/2026	29.55
Total 100-30-53240-3310 EXPENSE ALLOWANCE:				92.49
100-30-53240-3490 OPERATING EXPENSES				
PACKER CITY INTL TRUCKS IN	X102107871:0	(10) WWWSB221 SNOW BEAST BLADES22	09/01/2026	75.00
Total 100-30-53240-3490 OPERATING EXPENSES:				75.00
100-30-53240-3510 GAS & OIL				
KWIK TRIP INC	SEPTEMBER 2	STREET	09/30/2026	3,990.76

Vendor Name	Invoice Number	Description	Invoice Date	Net Invoice Amount
Total 100-30-53240-3510 GAS & OIL:				3,990.76
100-30-53240-3530 MACHINE & EQUIPMENT PARTS				
INTERSTATE BATTERY OF GRE	20223613	S06: (2) 31-MHD INTERSTATE BATTERIES	09/02/2026	311.90
INTERSTATE BATTERY OF GRE	20224063	S15: (2) 31-MHD INTERSTATE BATTERIES	09/30/2026	311.90
LACAL EQUIPMENT INC	0456238-IN	S33: BUSHING	08/27/2026	146.21
O'REILLY AUTO PARTS	2204-431783	S18: TOGGLE SWITCH	09/29/2026	7.98
O'REILLY AUTO PARTS	2204-431937	PD7: OIL FILTER	09/30/2026	4.86
NAPA AUTO PARTS	062990	S14: PANEL FILTER	09/03/2026	20.02
NAPA AUTO PARTS	063284	W04: NAPA GOLD FILTER	09/16/2026	15.45
NAPA AUTO PARTS	063311	PD3: NAPA OIL FILTER	09/17/2026	6.04
Total 100-30-53240-3530 MACHINE & EQUIPMENT PARTS:				824.36
100-30-53300-2100 INFORMATION TECHNOLOGY				
MSA PROFESSIONAL SERVICE	032541	UPGRADE STORM GIS MAPPING	09/01/2026	55.20
Total 100-30-53300-2100 INFORMATION TECHNOLOGY:				55.20
100-30-53300-2250 TELEPHONE				
AT&T MOBILITY II LLC	287305595089	250-5320	09/11/2026	.97
AT&T MOBILITY II LLC	287305595089	250-9200	09/11/2026	3.22
Total 100-30-53300-2250 TELEPHONE:				4.19
100-30-53300-2270 STREET LIGHTING				
CLINTONVILLE UTILITIES	1-0005-00 9/26	ELECTRIC: W. 12TH STREET & MAIN STREET - ERICKSONS	09/30/2026	18.52
CLINTONVILLE UTILITIES	10-1305-00 9/2	ELECTRIC: HARRIET & GREEN TREE ROAD STOP LIGHT	09/30/2026	10.93
CLINTONVILLE UTILITIES	1-0475-00 9/26	ELECTRIC: 8TH STREET & MAIN STREET FOUNTAIN	09/30/2026	49.99
CLINTONVILLE UTILITIES	1-0476-00 9/26	ELECTRIC: 8TH STREET & MAIN STREET TRAFFIC SIGNALS	09/30/2026	27.97
CLINTONVILLE UTILITIES	1-0950-00 9/26	ELECTRIC: S. MAIN STREET & HWY 45	09/30/2026	90.99
CLINTONVILLE UTILITIES	11-0541-00 9/2	ELECTRIC: UTILITY OWNED 150 HPS STREET LIGHTS	09/30/2026	2,299.85
CLINTONVILLE UTILITIES	14-2370-00 9/2	ELECTRIC: LINCOLN & WILSON LED	09/30/2026	676.97
CLINTONVILLE UTILITIES	14-2380-00 9/2	ELECTRIC: S. MADISON & E. MADISON 130 LED STREET LIGHT	09/30/2026	229.82
CLINTONVILLE UTILITIES	14-2390-00 9/2	ELECTRIC: WILSON STREET & GARFIELD STREET	09/30/2026	479.74
CLINTONVILLE UTILITIES	2-0115-00 9/26	ELECTRIC: 6TH STREET & S. MAIN STREET	09/30/2026	59.69
CLINTONVILLE UTILITIES	2-0117-00 9/26	ELECTRIC: HWY 45 STREET LIGHTS	09/30/2026	649.83
CLINTONVILLE UTILITIES	2-0360-00 9/26	ELECTRIC: 7TH STREET & MAIN STREET	09/30/2026	26.44
CLINTONVILLE UTILITIES	2-0472-00 9/26	ELECTRIC: MEMORIAL CIRCLE - SENIOR VILLAGE	09/30/2026	1,131.86
CLINTONVILLE UTILITIES	2-1150-00 9/26	ELECTRIC: 12TH STREET & S. MAIN STREET TRAFFIC SIGNALS	09/30/2026	45.93
CLINTONVILLE UTILITIES	3-0161-00 9/26	ELECTRIC: DAM & RIVERWALK	09/30/2026	25.19
CLINTONVILLE UTILITIES	4-0975-00 9/26	ELECTRIC: 8TH STREET & HEMLOCK STREET	09/30/2026	7.97
CLINTONVILLE UTILITIES	5-0521-00 9/26	ELECTRIC: MIDDLE SCHOOL - 8TH STREET	09/30/2026	100.19
CLINTONVILLE UTILITIES	5-0820-00 9/26	ELECTRIC: HWY 45 - LIGHT BY APARTMENT	09/30/2026	175.67
CLINTONVILLE UTILITIES	8-0696-00 9/26	ELECTRIC: INDUSTRIAL PARK SIGN	09/30/2026	7.20
CLINTONVILLE UTILITIES	8-0806-00 9/26	ELECTRIC: NORTH SIDE INFORMATION SIGN	09/30/2026	66.50
CLINTONVILLE UTILITIES	8-0861-00 9/26	ELECTRIC: N. MAIN STREET - 18TH STREET LED	09/30/2026	94.61
CLINTONVILLE UTILITIES	9-0005-00 9/26	ELECTRIC: W 12TH STREET BY FCCU	09/30/2026	129.40
Total 100-30-53300-2270 STREET LIGHTING:				6,405.26
100-30-53300-2300 CONTRACTED SERVICES				
WAUPACA COUNTY TREASURE	CINV-2026-245	ASSISTING AT REMOVING SAND IN DITCHES (7TH ST & AIRPOR	09/14/2026	892.85
Total 100-30-53300-2300 CONTRACTED SERVICES:				892.85

Vendor Name	Invoice Number	Description	Invoice Date	Net Invoice Amount
100-30-53300-2304 LANDSCAPING				
PROVISION PARTNERS / ALLIE	5611164	(50LBS.) @ $2.40/LB. TUFF STUFF - LAWN SEED	09/29/2026	120.00
Total 100-30-53300-2304 LANDSCAPING:				120.00
100-30-53300-3310 EXPENSE ALLOWANCE				
THEDACARE AT WORK	389019	RA: DS CRL DOT BUNDLED (84.00); ALCOHOL SCREENING (44.0	09/01/2026	90.88
CINTAS CORPORATION LOC 44	4281634891	MECHANIC UNIFORMS	09/08/2026	4.75
CINTAS CORPORATION LOC 44	4282263741	MECHANIC UNIFORMS	09/14/2026	4.75
CINTAS CORPORATION LOC 44	4283868792	MECHANIC UNIFORMS	09/28/2026	4.75
Total 100-30-53300-3310 EXPENSE ALLOWANCE:				105.13
100-30-53300-3490 OPERATING EXPENSES				
ELAN FINANCIAL SERVICES	0984-83126	BUG SPRAY	08/31/2026	7.19
WAUPACA COUNTY TREASURE	CINV-2026-266	US 45 & STH 22 PAINTING	10/05/2026	5,793.23
PETERS CONCRETE	2268122	(4.5000CY) 4000 PSI EXTERIOR FLAT; 1/2% CALCIUM CHOLORI	09/17/2026	704.25
Total 100-30-53300-3490 OPERATING EXPENSES:				6,504.67
100-30-53300-4500 SIDEWALK PROGRAM				
PETERS CONCRETE	2265762	(6.2500CY) 4000 PSI EXTERIOR FLAT; AE-3 WATER REPELLING	07/29/2026	937.50
PETERS CONCRETE	2267468	(9.0000CY) 4000 PSI EXTERIOR FLAT; 1/2% CALCIUM CHLORIDE	09/02/2026	1,408.50
PETERS CONCRETE	2267469	(8.0000CY) 4000 PSI EXTERIOR FLAT; 1/2% CALCIUM CHLORIDE	09/02/2026	1,252.00
PETERS CONCRETE	2267657	(8.0000CY) 4000 PSI EXTERIOR FLAT; AE-3 WATER REPELLING	09/09/2026	1,240.00
PETERS CONCRETE	2268044	(10.000CY) 4000 PSI EXTERIOR FLAT; AE-3 WATER REPELLING	09/16/2026	1,550.00
PETERS CONCRETE	2268686	(5.0000CY) 4000 PSI EXTERIOR FLAT; AE-3 WATER REPELLING	09/29/2026	775.00
HIDDE CONCRETE LLC	9162026	8/12 (102.5'); 8/13 (42'); 8/20 (112') & (69'); 9/2 (136.5') & (121')	09/16/2026	5,820.00
Total 100-30-53300-4500 SIDEWALK PROGRAM:				12,983.00
100-30-53420-2270 STREET LIGHTING				
CLINTONVILLE UTILITIES	2-0471-00 9/26	ELECTRIC: RV OUTLETS - MEMORIAL CIRCLE PARKING LOT	09/30/2026	22.47
CLINTONVILLE UTILITIES	7-1045-00 9/26	ELECTRIC: E. MADISON STREET #A	09/30/2026	6.70
Total 100-30-53420-2270 STREET LIGHTING:				29.17
100-40-46730 SOCCER FEES				
LAMBERG, NIKKI	100726-REFU	SOCCER COACHING REFUND	10/07/2026	49.53
CARLSEN, ALEXUS	100726-REFU	SOCCER COACH REFUND	10/07/2026	37.87
ZILL, LISHA	100726-REFU	SOCCER COACHING REFUND - LISHA ZILL	10/07/2026	66.35
SCHROEDER, LIZ	100726-REFU	SOCCER COACHING REFUND - LIZ SCHROEDER	10/07/2026	39.76
POPPE, AMBER	100726-REFU	SOCCER COACHING REFUND - AMBER POPPE	10/07/2026	33.18
ZIEREIS, JENNIFER	100726-REFU	SOCCER COACHING REFUND - JENNIFER ZIEREIS	10/07/2026	66.35
RYDZEWSKI, EMILY	100726-REFU	SOCCER COACH REFUND	10/07/2026	34.22
OTTO, TIM	100726-REFU	SOCCER COACHING REFUND - TIM OTTO	10/07/2026	38.63
O'CONNOR, LIZZY	100726-REFU	SOCCER COACHING REFUND - LIZZY OCONNOR	10/07/2026	33.18
NETZEL, FAUNDA	100726-REFU	SOCCER COACHING REFUND - FAUNDA NIETZEL	10/07/2026	64.45
CONRADT, STACEY	100726-REFU	SOCCER COACHING REFUND - STACY CONRADT	10/07/2026	49.53
HESSE, JENNA	100726-REFU	SOCCER COACHING REFUND	10/07/2026	33.18
DOORNINK, TURNER	100726-REFU	SOCCER COACHING REFUND	10/07/2026	4.98
RIPP, HEATHER	100726-REFU	SOCCER COACHING REFUND	10/07/2026	49.53
RUBIO, SAMANTHA	100726-REFU	SOCCER COACH REFUND - SAMANTHA RUBIO	10/07/2026	23.70
Total 100-40-46730 SOCCER FEES:				624.44
100-40-46775 FALL PROGRAMS				
HOLBROOK, KATIE	93026	COED VOLLEYBALL REFUND - KATIE HOLBROOK	09/30/2026	47.39

Vendor Name	Invoice Number	Description	Invoice Date	Net Invoice Amount
Total 100-40-46775 FALL PROGRAMS:				47.39
100-40-55200-2100 INFORMATION TECHNOLOGY				
INTEGRATED SOLUTIONS INC	CW-31517	SEPTEMBER 2026 MANAGED SERVICES	09/14/2026	195.90
INTEGRATED SOLUTIONS INC	CW-31605	OCTOBER 2026 MANAGED SERVICES	10/07/2026	195.90
CHARTER COMMUNICATIONS	000131709152	INTERNET SERVICE - PARKS OFFICE	09/15/2026	67.73
Total 100-40-55200-2100 INFORMATION TECHNOLOGY:				459.53
100-40-55200-2250 TELEPHONE				
AT&T MOBILITY II LLC	287305595089	250-5320	09/11/2026	19.33
AT&T MOBILITY II LLC	287305595089	250-9200	09/11/2026	6.44
Total 100-40-55200-2250 TELEPHONE:				25.77
100-40-55200-2270 WATER & ELECTRIC				
CLINTONVILLE UTILITIES	11-0865-00 9/2	ELECTRIC - OLEN PARK ROAD	09/30/2026	58.00
CLINTONVILLE UTILITIES	16-0450-00 9/2	WATER & ELECTRIC - PARKS OFFICE	09/30/2026	87.76
CLINTONVILLE UTILITIES	16-0455-00 9/2	ELECTRIC - TRACTOR SHED	09/30/2026	12.34
CLINTONVILLE UTILITIES	16-0460-00 9/2	ELECTRIC - DIAMOND #3	09/30/2026	16.71
CLINTONVILLE UTILITIES	16-0465-00 9/2	WATER & ELECTRIC - SOFTBALL SHELTER	09/30/2026	243.04
CLINTONVILLE UTILITIES	2-0436-00 9/26	WATER & ELECTRIC - ATHLETIC FIELD LIGHTS	09/30/2026	383.27
CLINTONVILLE UTILITIES	2-0440-00 9/26	WATER & ELECTRIC - ATHLETIC FIELD RESTROOMS	09/30/2026	60.00
CLINTONVILLE UTILITIES	2-0450-00 9/26	ELECTRIC - ATHLETIC FIELD CONCESSION/LOCKER	09/30/2026	31.69
CLINTONVILLE UTILITIES	2-0470-00 9/26	ELECTRIC - ICE SKATING RINK	09/30/2026	6.70
CLINTONVILLE UTILITIES	2-0740-01 9/26	ELECTRIC - MERC SITE/RIVERWALK	09/30/2026	7.87
CLINTONVILLE UTILITIES	2-0900-00 9/26	WATER & ELECTRIC - CENTRAL PARK	09/30/2026	77.12
CLINTONVILLE UTILITIES	2-0901-00 9/26	ELECTRIC - TENNIS COURTS	09/30/2026	8.74
CLINTONVILLE UTILITIES	6-1020-00 9/26	ELECTRIC - DIAMOND #2	09/30/2026	6.95
CLINTONVILLE UTILITIES	6-10252-00 9/2	ELECTRIC - DIAMOND #1	09/30/2026	6.70
CLINTONVILLE UTILITIES	6-1045-00 9/26	WATER & ELECTRIC - NORTH SHELTER	09/30/2026	6.70
CLINTONVILLE UTILITIES	6-1567-00 9/26	ELECTRIC - BATTING CAGE	09/30/2026	6.95
CLINTONVILLE UTILITIES	7-0040-00 9/26	ELECTRIC - OLEN PARK STORAGE	09/30/2026	11.44
Total 100-40-55200-2270 WATER & ELECTRIC:				1,031.98
100-40-55200-3310 EXPENSE ALLOWANCE				
AMAZON CAPITAL SERVICES	1LXG-YMDF-3	3M EAR PLUGS E-A-R CLASSIC 310-1001, UNCORDED	09/29/2026	33.00
Total 100-40-55200-3310 EXPENSE ALLOWANCE:				33.00
100-40-55200-3490 OPERATING EXPENSES				
PREMIUM WATERS INC	391545133	LATE PAYMENT FEE REFUND	09/02/2026	10.02-
PREMIUM WATERS INC	391547204	(4-5GAL) NICOLET & SERVICE CHARGE @ $6.99; (4) RETURNS	09/14/2026	44.99
PREMIUM WATERS INC	391554117	MONTHLY RENTAL OCTOBER	09/30/2026	12.00
PREMIUM WATERS INC	391555931	LATE PAYMENT FEE	09/30/2026	10.00
GFL ENVIRONMENTAL	R10000226446	GARBAGE/RECYCLING SERVICE: PARKS	09/17/2026	40.38
Total 100-40-55200-3490 OPERATING EXPENSES:				97.35
100-40-55200-3510 GAS & OIL				
KWIK TRIP INC	SEPTEMBER 2	PARK&REC	09/30/2026	1,037.04
Total 100-40-55200-3510 GAS & OIL:				1,037.04
100-40-55200-3530 MACHINE & EQUIPMENT PARTS				
POMP'S TIRE SERVICE INC	170103075	P03: FLAT TIRE REPAIR	09/21/2026	37.10

Vendor Name	Invoice Number	Description	Invoice Date	Net Invoice Amount
O'REILLY AUTO PARTS	2204-431786	P31: BATTERY, CORE CHARGE, CORE EXCHANGE	09/29/2026	175.99
Total 100-40-55200-3530 MACHINE & EQUIPMENT PARTS:				213.09
100-40-55200-3560 BLDG. REPAIR & MAINTENANCE				
ELAN FINANCIAL SERVICES	0177-82526	J-B WELD	08/25/2026	20.39
TORBORGS LUMBER & SUPPLY	2609-586502	(1) KEY COPY	09/03/2026	1.99
TORBORGS LUMBER & SUPPLY	2609-586856	(3) KEY COPIES	09/04/2026	5.97
Total 100-40-55200-3560 BLDG. REPAIR & MAINTENANCE:				28.35
100-40-55301-2100 INFORMATION TECHNOLOGY				
CHARTER COMMUNICATIONS	000131709152	INTERNET SERVICE - PARKS OFFICE	09/15/2026	47.73
Total 100-40-55301-2100 INFORMATION TECHNOLOGY:				47.73
100-40-55301-2250 TELEPHONE				
AT&T MOBILITY II LLC	287305595089	250-0216	09/11/2026	14.49
AT&T MOBILITY II LLC	287305595089	250-5320	09/11/2026	1.93
Total 100-40-55301-2250 TELEPHONE:				16.42
100-40-55301-3150 OFFICE SUPPLIES				
AMAZON CAPITAL SERVICES	1X9Q-JPDN-7	BROTHER TN227M TONER	09/17/2026	123.48
Total 100-40-55301-3150 OFFICE SUPPLIES:				123.48
100-40-55400-2250 TELEPHONE				
AT&T MOBILITY II LLC	287305595089	250-5320	09/11/2026	.64
AT&T MOBILITY II LLC	287305595089	250-9200	09/11/2026	18.68
Total 100-40-55400-2250 TELEPHONE:				19.32
100-40-55400-3496 SOCCER PROGRAMS				
SWANK MOTION PICTURES INC	2882957	HOTEL TRANSYLVANIA TRANSFORMANIA MOVIE SHOWING (10/	09/23/2026	410.00
BOLINS SPEEDY TS LLC	11340	SOCCER UNIFORM PACKAGE, AWARDS & SPONSOR BANNER	09/23/2026	9,797.00
Total 100-40-55400-3496 SOCCER PROGRAMS:				10,207.00
100-40-55420-2250 TELEPHONE				
AT&T MOBILITY II LLC	287305595089	250-5320	09/11/2026	2.25
AT&T MOBILITY II LLC	287305595089	250-9200	09/11/2026	.32
Total 100-40-55420-2250 TELEPHONE:				2.57
100-40-55420-2270 WATER & ELECTRIC				
CLINTONVILLE UTILITIES	6-1040-01 9/26	WATER & ELECTRIC - AQUA PARK	09/30/2026	335.05
Total 100-40-55420-2270 WATER & ELECTRIC:				335.05
100-40-55420-3490 OPERATING EXPENSES				
GFL ENVIRONMENTAL	R10000226446	GARBAGE/RECYCLING SERVICE: AQUA PARK	09/17/2026	15.14
BROMAK SALES INC	34078	(2-6PK) 12" DOUBLE CHEESE; (3-6PK) 12" PEPPERRONI; (1-6PK)	07/06/2026	220.50
Total 100-40-55420-3490 OPERATING EXPENSES:				235.64
100-40-56110-2250 TELEPHONE				
AT&T MOBILITY II LLC	287305595089	250-0216	09/11/2026	1.61

Vendor Name	Invoice Number	Description	Invoice Date	Net Invoice Amount
AT&T MOBILITY II LLC	287305595089	250-5320	09/11/2026	1.61
AT&T MOBILITY II LLC	287305595089	250-9200	09/11/2026	.32
Total 100-40-56110-2250 TELEPHONE:				3.54
100-40-56110-3310 EXPENSE ALLOWANCE				
THEDACARE AT WORK	389019	RA: DS CRL DOT BUNDLED (84.00); ALCOHOL SCREENING (44.0	09/01/2026	25.60
CINTAS CORPORATION LOC 44	4281634891	MECHANIC UNIFORMS	09/08/2026	.37
CINTAS CORPORATION LOC 44	4282263741	MECHANIC UNIFORMS	09/14/2026	.37
CINTAS CORPORATION LOC 44	4283868792	MECHANIC UNIFORMS	09/28/2026	.37
Total 100-40-56110-3310 EXPENSE ALLOWANCE:				26.71
100-50-53510-2250 TELEPHONE EXPENSES				
FRONTIER COMMUNICATIONS	715-823-7691-	WEATHERMATION AWOS PHONELINE	10/01/2026	223.36
AT&T MOBILITY II LLC	287305595089	250-0216	09/11/2026	1.61
AT&T MOBILITY II LLC	287305595089	250-5320	09/11/2026	.32
Total 100-50-53510-2250 TELEPHONE EXPENSES:				225.29
100-50-53510-2270 WATER & ELECTRIC				
ALLIANT ENERGY	9746160000 9/	ELECTRIC SERVICE - FIELD LIGHTS	09/18/2026	285.80
ALLIANT ENERGY	9746160000 9/	ELECTRIC SERVICE - ENTRANCE SIGN POLE	09/18/2026	34.48
ALLIANT ENERGY	9746160000 9/	ELECTRIC SERVICE - PRIVATE HANGER VILLAGE	09/18/2026	93.41
ALLIANT ENERGY	9746160000 9/	ELECTRIC SERVICE - SRE BUILDING	09/18/2026	66.01
ALLIANT ENERGY	9746160000 9/	ELECTRIC SERVICE - HANGER 440	09/18/2026	271.15
ALLIANT ENERGY	9746160000 9/	ELECTRIC SERVICE - WELL	09/18/2026	26.78
ALLIANT ENERGY	9746160000 9/	ELECTRIC SERVICE - AREA LIGHTING	09/18/2026	71.34
ALLIANT ENERGY	9746160000 9/	ELECTRIC SERVICE - HANGER 400	09/18/2026	31.96
Total 100-50-53510-2270 WATER & ELECTRIC:				880.93
100-50-53510-2301 RUNWAY MAINTENANCE				
KRUEGER'S SIGN & ELECTRIC	03-25292	TRIGGER INTERFACE BOARD; RESISTER; LABOR: $641.25 (6.75	08/28/2026	1,069.55
Total 100-50-53510-2301 RUNWAY MAINTENANCE:				1,069.55
100-50-53510-3310 EXPENSE ALLOWANCE				
THEDACARE AT WORK	389019	RA: DS CRL DOT BUNDLED (84.00); ALCOHOL SCREENING (44.0	09/01/2026	5.12
CINTAS CORPORATION LOC 44	4281634891	MECHANIC UNIFORMS	09/08/2026	3.24
CINTAS CORPORATION LOC 44	4282263741	MECHANIC UNIFORMS	09/14/2026	3.24
CINTAS CORPORATION LOC 44	4283868792	MECHANIC UNIFORMS	09/28/2026	3.24
Total 100-50-53510-3310 EXPENSE ALLOWANCE:				14.84
100-50-53510-3490 OPERATING EXPENSES				
GFL ENVIRONMENTAL	R10000226446	GARBAGE/RECYCLING SERVICE: AIRPORT	09/17/2026	15.14
Total 100-50-53510-3490 OPERATING EXPENSES:				15.14
Total 100:				122,784.70
201				
201-40-46743 COMMUNITY CENTER FEES				
MATTES, ZHENYA	100126-REFU	COMMUNITY CENTER REFUND - ZHIENYA MATTES	10/01/2026	90.05
Total 201-40-46743 COMMUNITY CENTER FEES:				90.05

Vendor Name	Invoice Number	Description	Invoice Date	Net Invoice Amount
201-40-55140-2100 INFORMATION TECHNOLOGY				
INTEGRATED SOLUTIONS INC	CW-31517	SEPTEMBER 2026 MANAGED SERVICES	09/14/2026	58.98
INTEGRATED SOLUTIONS INC	CW-31605	OCTOBER 2026 MANAGED SERVICES	10/07/2026	58.98
Total 201-40-55140-2100 INFORMATION TECHNOLOGY:				117.96
201-40-55140-2250 TELEPHONE				
AT&T MOBILITY II LLC	287305595089	250-5320	09/11/2026	2.58
AT&T MOBILITY II LLC	287305595089	250-9200	09/11/2026	3.22
Total 201-40-55140-2250 TELEPHONE:				5.80
201-40-55140-2270 WATER & ELECTRIC				
CLINTONVILLE UTILITIES	1-0081-00 9/26	WATER & ELECTRIC - COMMUNITY CENTER	09/30/2026	267.22
Total 201-40-55140-2270 WATER & ELECTRIC:				267.22
201-40-55140-3490 OPERATING EXPENSES				
GFL ENVIRONMENTAL	R10000226446	GARBAGE/RECYCLING SERVICE: COMMUNITY CENTER	09/17/2026	15.14
Total 201-40-55140-3490 OPERATING EXPENSES:				15.14
201-40-55140-3560 BLDG. REPAIR/MAINTENANCE				
TORBORGS LUMBER & SUPPLY	2609-598344	(1BX) ACOUSTICAL LAG Z 1/4X3	09/30/2026	35.99
Total 201-40-55140-3560 BLDG. REPAIR/MAINTENANCE:				35.99
Total 201:				532.16
204				
204-41-55110-2100 INFORMATION TECHNOLOGY				
INTEGRATED SOLUTIONS INC	CW-31517	SEPTEMBER 2026 MANAGED SERVICES	09/14/2026	58.98
INTEGRATED SOLUTIONS INC	CW-31605	OCTOBER 2026 MANAGED SERVICES	10/07/2026	58.98
Total 204-41-55110-2100 INFORMATION TECHNOLOGY:				117.96
204-41-55110-2250 TELEPHONE				
CHARTER COMMUNICATIONS	237241501092	PHONE SERVICE - LIBRARY	09/21/2026	47.32
Total 204-41-55110-2250 TELEPHONE:				47.32
204-41-55110-2270 WATER & ELECTRIC				
CLINTONVILLE UTILITIES	4-0390-00 9/26	WATER & ELECTRIC - LIBRARY	09/30/2026	865.68
Total 204-41-55110-2270 WATER & ELECTRIC:				865.68
204-41-55110-3110 POSTAGE				
ELAN FINANCIAL SERVICES	1967-8366	SHIPPING	08/25/2026	240.48
Total 204-41-55110-3110 POSTAGE:				240.48
204-41-55110-3112 COPY EXPENSE				
JAMES IMAGING SYSTMES INC	43115813	COPIER LEASE & USAGE	09/26/2026	237.12
Total 204-41-55110-3112 COPY EXPENSE:				237.12
204-41-55110-3122 STAFF DEVELOPMENT				
ELAN FINANCIAL SERVICES	26276	WLA ANNUAL CONFERENCE REGISTRATION-JAMIE	09/03/2026	490.00

Vendor Name	Invoice Number	Description	Invoice Date	Net Invoice Amount
Total 204-41-55110-3122 STAFF DEVELOPMENT:				490.00
204-41-55110-3123 MAINTENANCE				
AMAZON CAPITAL SERVICES	1DDN-VHQJ-H	BATTERY BACKUP	09/09/2026	36.99
AMAZON CAPITAL SERVICES	1WNN-JJ4R-N	SANDING SPONGE	09/02/2026	9.79
Total 204-41-55110-3123 MAINTENANCE:				46.78
204-41-55110-3150 OFFICE SUPPLIES				
ELM USA INC	88614	DISC CLEANING SERVICE	09/17/2026	25.00
PLAYAWAY PRODUCTS LLC	548057	CASES, CORDS, COVERS	09/04/2026	133.71
Total 204-41-55110-3150 OFFICE SUPPLIES:				158.71
204-41-55110-3269 BOOKS-ADULT				
CENTER POINT LARGE PRINT	2272230	LARGE PRINT BOOKS	09/03/2026	62.92
AMAZON CAPITAL SERVICES	13KV-6PF7-J1	BOOKS	09/13/2026	84.74
AMAZON CAPITAL SERVICES	16N1-NL9T-6K	BOOKS	09/20/2026	223.80
AMAZON CAPITAL SERVICES	1N34-7136-1N	BOOKS	09/20/2026	68.74
AMAZON CAPITAL SERVICES	1P36-KHTF-H	BOOKS	09/26/2026	155.34
AMAZON CAPITAL SERVICES	1RDM-KNHT-T	BOOKS	09/27/2026	37.95
AMAZON CAPITAL SERVICES	1WNN-JJ4R-N	BOOKS	09/02/2026	12.03
AMAZON CAPITAL SERVICES	1X6H-3XVP-L	BOOKS	09/13/2026	298.03
CENGAGE LEARNING INC	999103534232	LARGE PRINT BOOKS	09/18/2026	92.25
CENGAGE LEARNING INC	999103555991	LARGE PRINT BOOKS	09/21/2026	54.00
CENGAGE LEARNING INC	999103578608	LARGE PRINT BOOKS	09/23/2026	30.75
CENGAGE LEARNING INC	999103578609	LARGE PRINT BOOKS	09/23/2026	27.00
Total 204-41-55110-3269 BOOKS-ADULT:				1,147.55
204-41-55110-3270 BOOKS-JUVENILE				
PENWORTHY COMPANY, THE	0621636-IN	CHILDREN'S BOOKS	09/28/2026	2,006.39
AMAZON CAPITAL SERVICES	11XL-X1PK-1H	CHILDREN'S BOOKS	09/29/2026	32.42
AMAZON CAPITAL SERVICES	1DGT-J1LR-96	CHILDREN'S BOOKS	09/15/2026	174.79
AMAZON CAPITAL SERVICES	1F6J-6Y9M-4Q	CHILDREN'S BOOKS	09/20/2026	25.28
AMAZON CAPITAL SERVICES	1HFL-TH19-76	CHILDREN'S BOOKS	09/15/2026	182.64
AMAZON CAPITAL SERVICES	1HXX-7H4C-3	CHILDREN'S BOOKS	09/27/2026	42.04
AMAZON CAPITAL SERVICES	1VTW-6YTY-X	CHILDREN'S BOOKS	09/20/2026	55.95
AMAZON CAPITAL SERVICES	1X3M-6CTD-J	CHILDREN'S BOOKS	09/30/2026	21.98
AMAZON CAPITAL SERVICES	1YWG-K14P-J	CHILDREN'S BOOK	09/02/2026	5.99
Total 204-41-55110-3270 BOOKS-JUVENILE:				2,547.48
204-41-55110-3272 eCONTENT				
MIDWEST TAPE LLC	509498456	AUDIOBOOKS, DIGITAL COMICS, EBOOKS, DIGITAL MOVIES, DI	09/30/2026	471.27
Total 204-41-55110-3272 eCONTENT:				471.27
204-41-55110-3280 PROGRAMS				
ELAN FINANCIAL SERVICES	0054-90826	PROGRAM SUPPLIES	09/08/2026	13.98
ELAN FINANCIAL SERVICES	0132-82726	TORTOISE FOOD	08/27/2026	2.99
ELAN FINANCIAL SERVICES	0156-91426	TORTOISE FOOD	09/14/2026	2.99
ELAN FINANCIAL SERVICES	0164-83126	PROGRAM SUPPLIES	08/31/2026	21.97
ELAN FINANCIAL SERVICES	0175-92126	TEEN PROGRAM SUPPLIES	09/21/2026	61.91
AMAZON CAPITAL SERVICES	14TT-R63F-NQ	PROGRAM SUPPLIES	09/14/2026	44.94
AMAZON CAPITAL SERVICES	16WK-YG14-7	PROGRAM SUPPLIES	09/22/2026	77.90

Vendor Name	Invoice Number	Description	Invoice Date	Net Invoice Amount
Total 204-41-55110-3280 PROGRAMS:				226.68
204-41-55110-3285 A/V MATERIALS-ADULT				
AMAZON CAPITAL SERVICES	16P4-W6FG-G	MOVIES	09/22/2026	82.90
AMAZON CAPITAL SERVICES	1L3W-WL93-K	MOVIES	09/13/2026	24.95
AMAZON CAPITAL SERVICES	1N34-7136-139	MOVIES	09/20/2026	19.95
AMAZON CAPITAL SERVICES	1PLQ-NGQK-1	CREDIT	09/22/2026	3.03-
Total 204-41-55110-3285 A/V MATERIALS-ADULT:				124.77
204-41-55110-3286 A/V MATERIALS-JUVENILE				
AMAZON CAPITAL SERVICES	1966-3TD4-FL	CHILDREN'S MOVIES	09/22/2026	44.92
AMAZON CAPITAL SERVICES	1G47-RTP7-Q	CHILDREN'S MOVIES	09/13/2026	44.90
AMAZON CAPITAL SERVICES	1WNN-JJ4R-N	CHILDREN'S MOVIES	09/02/2026	40.82
Total 204-41-55110-3286 A/V MATERIALS-JUVENILE:				130.64
204-41-55110-3490 OPERATING EXPENSES				
UNIQUE MANAGEMENT SERVI	6163969	ACCOUNTS SENT TO COLLECTIONS	09/01/2026	9.85
GFL ENVIRONMENTAL	R10000226446	GARBAGE/RECYCLING SERVICE: LIBRARY	09/17/2026	28.50
Total 204-41-55110-3490 OPERATING EXPENSES:				38.35
204-41-55110-3560 BLDG. REPAIR/MAINTENANCE				
DAMARC QUALITY INSPECTION	75617	BOILER INSPECTION	09/22/2026	180.00
AUTOMATED COMFORT CONT	41558	PREVENTATIVE MAINTENANCE MATERIALS	09/22/2026	331.99
Total 204-41-55110-3560 BLDG. REPAIR/MAINTENANCE:				511.99
Total 204:				7,402.78
205				
205-40-43200 RIDE FARES				
RUNNING INC	33831	SEPT FARES	10/06/2026	1,478.00-
Total 205-40-43200 RIDE FARES:				1,478.00-
205-40-53520-3490 OPERATING EXPENSES				
RUNNING INC	33831	SEPT SUBSIDY	10/06/2026	11,609.76
Total 205-40-53520-3490 OPERATING EXPENSES:				11,609.76
Total 205:				10,131.76
207				
207-20-52101-2100 INFORMATION TECHNOLOGY				
INTEGRATED SOLUTIONS INC	CW-31517	SEPTEMBER 2026 MANAGED SERVICES	09/14/2026	19.86
INTEGRATED SOLUTIONS INC	CW-31605	OCTOBER 2026 MANAGED SERVICES	10/07/2026	19.86
Total 207-20-52101-2100 INFORMATION TECHNOLOGY:				39.72
207-20-52101-2250 TELEPHONE EXPENSES				
AT&T MOBILITY II LLC	287305595089	250-0224	09/11/2026	32.21
Total 207-20-52101-2250 TELEPHONE EXPENSES:				32.21

Vendor Name	Invoice Number	Description	Invoice Date	Net Invoice Amount
Total 207:				71.93
211				
211-40-55140-2270 WATER & ELECTRIC				
CLINTONVILLE UTILITIES	2-0500-00 9/26	WATER & ELECTRIC - VET'S MEMORIAL	09/30/2026	122.26
Total 211-40-55140-2270 WATER & ELECTRIC:				122.26
Total 211:				122.26
214				
214-20-52109-3310 K-9 EXPENSE				
ELAN FINANCIAL SERVICES	AJDGO5IM-00	K-9 PROGRAM SUB	09/03/2026	140.00
CLINTONVILLE HOMETOWN VE	49861	K-9 VET BILL	06/23/2026	223.20
Total 214-20-52109-3310 K-9 EXPENSE:				363.20
Total 214:				363.20
218				
218-10-56700-3490 TOURISM FUNDING				
WAUPACA COUNTY ECONOMIC	2026 CONTRIB	2026 CONTRIB FOR WAUPACA MARKETING COOP	08/28/2026	2,400.00
Total 218-10-56700-3490 TOURISM FUNDING:				2,400.00
Total 218:				2,400.00
219				
219-30-53600-2300 CONTRACTED SERVICES				
HARTER'S FOX VALLEY DISPO	2053993	GARBAGE/RECYCLING - CITY WIDE	08/31/2026	25,584.07
Total 219-30-53600-2300 CONTRACTED SERVICES:				25,584.07
Total 219:				25,584.07
226				
226-20-52101-3490 OPERATING EXPENSES				
PETTY CASH	SEPTEMBER 2	9/23/26 PD POSTAGE	09/30/2026	10.95
PETTY CASH	SEPTEMBER 2	9/23/26 PD POSTAGE	09/30/2026	8.15
Total 226-20-52101-3490 OPERATING EXPENSES:				19.10
Total 226:				19.10
227				
227-40-54910-2100 INFORMATION TECHNOLOGY				
MSA PROFESSIONAL SERVICE	032541	ROUTINE CEMETERY TASKS & REQUESTED CEMETERY TASKS	09/01/2026	1,191.20
CHARTER COMMUNICATIONS	236269601092	INTERNET SERVICE - GRACELAND CEMETERY	09/21/2026	129.99
Total 227-40-54910-2100 INFORMATION TECHNOLOGY:				1,321.19
227-40-54910-2270 WATER & ELECTRIC				
CLINTONVILLE UTILITIES	16-0130-01 9/2	WATER & ELECTRIC - GRACELAND CEMETERY	09/30/2026	62.44
Total 227-40-54910-2270 WATER & ELECTRIC:				62.44
227-40-54910-2300 CONTRACTED SERVICES				
TONY'S CEMETERY SERVICE	6692	SEPTEMBER GROUNDS MAINTENANCE, GRAVE PREP & SEXT	09/30/2026	6,080.00

Vendor Name	Invoice Number	Description	Invoice Date	Net Invoice Amount
Total 227-40-54910-2300 CONTRACTED SERVICES:				6,080.00
227-40-54910-3490 OPERATING EXPENSES				
GFL ENVIRONMENTAL	R10000226446	GARBAGE/RECYCLING SERVICE: GRACELAND CEMETERY	09/17/2026	15.14
Total 227-40-54910-3490 OPERATING EXPENSES:				15.14
Total 227:				7,478.77
228				
228-21-52301-3140 NON-DURABLE/DISPOSABLE EQUIP				
ELAN FINANCIAL SERVICES	40631655	EMS SUPPLIES	08/25/2026	456.31
BOUND TREE MEDICAL LLC	86336137	EMR EQUIPMENT	08/28/2026	456.31
Total 228-21-52301-3140 NON-DURABLE/DISPOSABLE EQUIP:				912.62
Total 228:				912.62
229				
229-23-52300-8104 CAPITAL-SMALL EQUIPMENT				
KRUEGER, SHANE	0027 034 1294	27 CF REFRIG, 5.3 FT EL RANGE, 24" DISHWASHER	10/08/2026	3,706.92
EMERGENCY VEHICLE SERVIC	688	STRYKER POWER PRO XT COTS (2006/2026)	10/07/2026	25,000.00
EMERGENCY VEHICLE SERVIC	736	STRYKER LUCAS 3 (2019 MODEL)	10/07/2026	9,500.00
EMERGENCY VEHICLE SERVIC	737	STRYKER MANUAL STAIR CHAIRS (2005/2006)	10/07/2026	3,200.00
EMERGENCY VEHICLE SERVIC	738	EX-GUARD BLACK BRUSH GUARDS FOR BOTH AMBULANCES	10/07/2026	7,850.00
Total 229-23-52300-8104 CAPITAL-SMALL EQUIPMENT:				49,256.92
Total 229:				49,256.92
401				
401-30-57310-8204 ENGINEERING				
WI DEPT OF TRANSPORTATION	395-00004524	SOUTH MAIN STREET DESIGN (REINKE ROAD - 3RD STREET) (	09/01/2026	4,640.81
KUNKEL ENGINEERING GROUP	0290550	CONSTRUCTION RELATED SERVICES & INSPECTION - MEMORI	08/31/2026	3,757.50
Total 401-30-57310-8204 ENGINEERING:				8,398.31
401-40-57630-8215 BUILDING IMPROVEMENTS				
KUNKEL ENGINEERING GROUP	0290553	BIDDING/CRS & INSPECTION: PARKING LOT	08/31/2026	2,171.00
Total 401-40-57630-8215 BUILDING IMPROVEMENTS:				2,171.00
Total 401:				10,569.31
428				
428-10-56608-7600 ADMINISTRATION				
WOLF RIVER LAWYERS SC	OCTOBER 202	OCTOBER 2026	10/01/2026	127.91
Total 428-10-56608-7600 ADMINISTRATION:				127.91
Total 428:				127.91
429				
429-10-56609-7600 ADMINISTRATION				
WOLF RIVER LAWYERS SC	OCTOBER 202	OCTOBER 2026	10/01/2026	127.91

Vendor Name	Invoice Number	Description	Invoice Date	Net Invoice Amount
Total 429-10-56609-7600 ADMINISTRATION:				127.91
Total 429:				127.91
501				
501-50-53510-2100 INFORMATION TECHNOLOGY				
FRONTIER COMMUNICATIONS	715-823-7691-	FUEL TRANSACTION INTERNET	10/01/2026	183.66
INTEGRATED SOLUTIONS INC	CW-31517	SEPTEMBER 2026 MANAGED SERVICES	09/14/2026	58.98
INTEGRATED SOLUTIONS INC	CW-31605	OCTOBER 2026 MANAGED SERVICES	10/07/2026	58.98
Total 501-50-53510-2100 INFORMATION TECHNOLOGY:				301.62
501-50-53510-2270 WATER & ELECTRICITY				
ALLIANT ENERGY	9746160000 9/	ELECTRIC SERVICE - FUEL STATION	09/18/2026	49.74
Total 501-50-53510-2270 WATER & ELECTRICITY:				49.74
Total 501:				351.36
602				
602-62-53610-2250 TELEPHONE EXPENSES				
ELAN FINANCIAL SERVICES	01111791652	INTERNET AND PHONE 350 15TH STREET	08/28/2026	160.00
ELAN FINANCIAL SERVICES	0606869631	INTERNET AND PHONE 350 15TH STREET	09/28/2026	160.00
ELAN FINANCIAL SERVICES	AUGUST 2026	ROBO CALLS	09/02/2026	33.33
CHARTER COMMUNICATIONS	171723301092	OCTOBER 2026 INTERNET	09/21/2026	17.78
AT&T MOBILITY II LLC	287305595089	250-0358	09/11/2026	6.64
AT&T MOBILITY II LLC	287305595089	250-0645	09/11/2026	32.21
AT&T MOBILITY II LLC	287305595089	250-0623	09/11/2026	32.21
AT&T MOBILITY II LLC	287305595089	460-1723	09/11/2026	30.11
Total 602-62-53610-2250 TELEPHONE EXPENSES:				472.28
602-62-53610-2270 WATER AND ELECTRICITY EXPENSES				
CLINTONVILLE UTILITIES	10-2490-00-09-	LIFT STATION #3	09/30/2026	189.02
CLINTONVILLE UTILITIES	11-0374-01-09-	131 A HARRIET STREET	09/30/2026	9.77
CLINTONVILLE UTILITIES	12-0870-00-09-	DOG POUND	09/30/2026	17.92
CLINTONVILLE UTILITIES	12-0881-00-09-	350 E 15TH ST	09/30/2026	5,046.51
CLINTONVILLE UTILITIES	15-1415-00-09-	LIFT STATION #2	09/30/2026	40.45
CLINTONVILLE UTILITIES	15-3280-00-09-	LIFT STATION #6	09/30/2026	61.65
CLINTONVILLE UTILITIES	16-0187-00-09-	LIFT STATION #11	09/30/2026	35.33
CLINTONVILLE UTILITIES	3-0990-00-09-2	LIFT STATION #5	09/30/2026	17.59
CLINTONVILLE UTILITIES	5-0240-00-09-2	LIFT STATION #8	09/30/2026	21.57
CLINTONVILLE UTILITIES	5-0875-00-09-2	LIFT STATION #9	09/30/2026	40.59
CLINTONVILLE UTILITIES	5-1090-00-09-2	LIFT STATION #10	09/30/2026	27.24
CLINTONVILLE UTILITIES	7-0540-00-09-2	LIFT STATION #12	09/30/2026	15.29
CLINTONVILLE UTILITIES	9-0880-00-09-2	LIFT STATION #4	09/30/2026	30.58
Total 602-62-53610-2270 WATER AND ELECTRICITY EXPENSES:				5,553.51
602-62-53610-2300 CONTRACTED SERVICES				
MSA PROFESSIONAL SERVICE	033270	TEMPORARY OIC FOR WASTEWATER	09/18/2026	667.50
DIGGERS HOTLINE INC	260 7 11402	WW	07/31/2026	51.00
DIGGERS HOTLINE INC	260 8 11402	WW	08/31/2026	50.27
DIGGERS HOTLINE INC	260 9 11402	WW	09/30/2026	45.47
ITRON	741855	ITRON ANNUAL MAINTENANCE AGREEMENT	09/11/2026	992.12
CINTAS CORPORATION LOC 44	4281634982	EMPLOYEE UNIFORMS	09/08/2026	38.94
CINTAS CORPORATION LOC 44	4282263892	EMPLOYEE UNIFORMS	09/14/2026	38.94

Vendor Name	Invoice Number	Description	Invoice Date	Net Invoice Amount
CINTAS CORPORATION LOC 44	4283104156	EMPLOYEE UNIFORMS	09/21/2026	38.94
CINTAS CORPORATION LOC 44	4283868837	EMPLOYEE UNIFORMS	09/28/2026	38.94
CINTAS CORPORATION LOC 44	4284628317	EMPLOYEE UNIFORMS	10/05/2026	38.94
AMARIL UNIFORM COMPANY	IV303411	NATALIE UNIFORM	09/02/2026	59.00
AMARIL UNIFORM COMPANY	IV303539	NATALIE UNIFORM	09/08/2026	263.39
UNITED MAILING SERVICES IN	235733	POSTAGE UTILITY BILLS	09/08/2026	606.10
BOARDMAN & CLARK LAW FIR	323584	LEGAL FEES FOR UTILITIES PROJECT	09/17/2026	660.52
INTEGRATED SOLUTIONS INC	CW-31517	SEPTEMBER 2026 MANAGED SERVICES	09/14/2026	176.34
INTEGRATED SOLUTIONS INC	CW-31605	OCTOBER 2026 MANAGED SERVICES	10/07/2026	176.34
GFL ENVIRONMENTAL	R10000226446	GARBAGE/RECYCLING: 350 15TH ST	09/17/2026	92.00
INSOURCE SOFTWARE SOLUTI	EST40201	WIN-911 ANNUAL CUSTOMER CARE SUPPORT	09/18/2026	1,200.00
Total 602-62-53610-2300 CONTRACTED SERVICES:				5,234.75
602-62-53610-3150 OFFICE SUPPLIES				
US BANK EQUIPMENT FINANCE	592289797	COPIER LEASE	10/01/2026	70.51
AMAZON CAPITAL SERVICES	1LK7-HDDG-6	WALL CLOCK, HALLOWEEN DECORATION	09/29/2026	19.54
Total 602-62-53610-3150 OFFICE SUPPLIES:				90.05
602-62-53610-3310 EXPENSE ALLOWANCE				
MSA PROFESSIONAL SERVICE	032541	UPGRADE SEWER GIS MAPPING	09/01/2026	197.20
Total 602-62-53610-3310 EXPENSE ALLOWANCE:				197.20
602-62-53610-3490 OTHER OPERATING EXPENSES				
GASVODA & ASSOCIATES INC	116284	PUMP TUBING FOR POLYMER PUMPS	09/30/2026	105.00
ELAN FINANCIAL SERVICES	2257	SHOP SUPPLIES / CLEANING CHEMICALS	09/08/2026	6.71
AMAZON CAPITAL SERVICES	116N-J7DM-LL	SHOLDER STRAP FOR WEED EATER	09/01/2026	5.80
Total 602-62-53610-3490 OTHER OPERATING EXPENSES:				117.51
602-62-53610-3510 GAS AND OIL				
KWIK TRIP INC	SEPTEMBER 2	CWWU	09/30/2026	1,040.71
Total 602-62-53610-3510 GAS AND OIL:				1,040.71
602-62-53610-3554 VEHICLE REPAIR/MAINTENANCE				
POMP'S TIRE SERVICE INC	170103185	TIRE REPAIR FOR WASTEWATER MOBILE GENERATOR TRAILE	09/28/2026	21.00
POMP'S TIRE SERVICE INC	170103267	NEW TIRES FOR 2015 CHEVY 2500	10/05/2026	174.41
AMAZON CAPITAL SERVICES	1DD6-GWRT-G	TORO LAWNMOWER BACK TIRES	09/24/2026	30.07
Total 602-62-53610-3554 VEHICLE REPAIR/MAINTENANCE:				225.48
602-62-53610-3557 SMALL EQUIPMENT REPAIR AND MAI				
AMAZON CAPITAL SERVICES	1K6W-616W-F	SPINDLE ASSEMBLY FOR WASTEWATER JOHN DEERE LAWNM	09/24/2026	29.90
Total 602-62-53610-3557 SMALL EQUIPMENT REPAIR AND MAI:				29.90
602-62-53610-7001 DNR REPLACEMENT				
ENERGENECS INC	EINV0051037	HUBER INFLUENT SCREEN BRUSH REPAIR	09/11/2026	3,524.48
NORTHEAST WI CRANE SERVI	10697	CRANE TO PULL WASTEWATER INFLUENT SCREEN	09/02/2026	1,625.06
Total 602-62-53610-7001 DNR REPLACEMENT:				5,149.54
602-62-53612-3490 OTHER OPERATING EXPENSES				
ELAN FINANCIAL SERVICES	261003	PT TESTING FOR WASTEWATER LAB	08/26/2026	160.00
ELAN FINANCIAL SERVICES	3011	BATTERIES FOR LAB AT PLANT	08/31/2026	33.58

Vendor Name	Invoice Number	Description	Invoice Date	Net Invoice Amount
NCL OF WISCONSIN INC	541863	LAB SUPPLIES, BOD NUTRIENT, AMMONIA AND PHOSPHORUS	09/29/2026	984.41
WI STATE LABORATORY OF HY	30050238	ANNUAL PT TESTING FOR THE WASTEWATER LAB	08/27/2026	200.00
BADGER LABORATORIES &	26-020256	DNR REQUIRED TKN AND CHLORIDE TESTING	09/23/2026	110.00
BE'S REFRESHMENTS INC	I46027	DISTILLED WATER	09/10/2026	59.00
BE'S REFRESHMENTS INC	I47063	DISTILLED WATER	09/23/2026	43.00
Total 602-62-53612-3490 OTHER OPERATING EXPENSES:				1,589.99
Total 602:				19,700.92
603				
603-10706 Const in Prog Substations				
FORSTER ELECTRICAL ENGIN	28006	ENGINEERING FOR INDUSTRIAL SUBSTATION	08/27/2026	2,392.50
FORSTER ELECTRICAL ENGIN	28136	ENGINEERING FOR INDUSTRIAL SUBSTATION	09/24/2026	5,495.51
STUART C IRBY COMPANY (OP	SO14696422.0	750 SUB WIRE	09/18/2026	17,257.35
VIRGINIA TRANSFORMER COR	99886	TRANSFORMER TARIFF - INDUSTRIAL SUB	08/28/2026	44,511.75
NORTHEAST WI CRANE SERVI	10744	CRANE TO SET NEW TRANSFORMER FOR INDUSTRIAL SUBST	09/16/2026	1,326.80
J&R UNDERGROUND LLS	45756	BORING FOR NEW 4KV FOR NEW INDUSTRIAL SUBSTATION	08/31/2026	37,043.00
Total 603-10706 Const in Prog Substations:				108,026.91
603-15000 Electric Inventory				
BORDER STATES INDUSTRIES I	933049035	CABLE SEALING KITS	08/27/2026	829.81
BORDER STATES INDUSTRIES I	933130855	SMD-20 FUSE	09/11/2026	3,268.80
Total 603-15000 Electric Inventory:				4,098.61
603-25320 Energy Assistance				
FOCUS ON ENERGY / SEERA	9302026	FOCUS PROGRAM FEE	09/30/2026	1,740.90
Total 603-25320 Energy Assistance:				1,740.90
603-36700 Underground				
J&R UNDERGROUND LLS	45757	BORING TO RUN UNDERGROUND WIRE ON VELTE RD	08/31/2026	8,895.00
Total 603-36700 Underground:				8,895.00
603-63-40800-3242 PSC Remainder Assessment				
PUBLIC SERVICE COMMISSION	RA27-I-01200	PSC REMAINDER ASSESSMENT	09/29/2026	12,749.99
Total 603-63-40800-3242 PSC Remainder Assessment:				12,749.99
603-63-54500-2270 Water And Electricity Expenses				
BADGER POWER MKTG AUTHO	830	PURCHASED POWER	09/30/2026	964,503.88
Total 603-63-54500-2270 Water And Electricity Expenses:				964,503.88
603-63-56200-3490 Other Operating Expenses				
WESCO RECEIVABLES CORP.	6694700-00	ARC FLASH RESCUE ELECTRIC SAFETY HARNESS	03/18/2026	547.78
AMAZON CAPITAL SERVICES	16FC-WH7C-K	ARC FLASH FULL BODY HARNESS	10/05/2026	373.36
AMAZON CAPITAL SERVICES	1NJX-HRJT-77	HARD HAT LED LIGHTS	09/24/2026	23.99
Total 603-63-56200-3490 Other Operating Expenses:				945.13
603-63-57500-2300 Contracted Services				
BORDER STATES INDUSTRIES I	933204864	ELECTRIC ANNUAL LARGE METER TESTING	09/24/2026	4,200.00

Vendor Name	Invoice Number	Description	Invoice Date	Net Invoice Amount
Total 603-63-57500-2300 Contracted Services:				4,200.00
603-63-90300-3110 Postage				
UNITED MAILING SERVICES IN	235733	POSTAGE UTILITY BILLS	09/08/2026	1,212.18
Total 603-63-90300-3110 Postage:				1,212.18
603-63-92100-2100 Computer Expenses				
ELAN FINANCIAL SERVICES	01111809754	INTERNET FOR 55 E. 12TH STREET	08/28/2026	72.00
ELAN FINANCIAL SERVICES	0606870199	INTERNET FOR 55 E. 12TH STREET	09/28/2026	72.00
CHARTER COMMUNICATIONS	171723301092	OCTOBER 2026 INTERNET	09/21/2026	17.78
Total 603-63-92100-2100 Computer Expenses:				161.78
603-63-92100-2250 Telephone Expenses				
ELAN FINANCIAL SERVICES	AUGUST 2026	ROBO CALLS	09/02/2026	33.33
AT&T MOBILITY II LLC	287305595089	250-2870	09/11/2026	32.21
AT&T MOBILITY II LLC	287305595089	250-1421	09/11/2026	32.21
Total 603-63-92100-2250 Telephone Expenses:				97.75
603-63-92100-3150 Office Supplies				
US BANK EQUIPMENT FINANCE	592289797	COPIER LEASE	10/01/2026	141.01
APPEAL DIGITAL IMAGE &	2070	BUSINESS CARDS KGRAPER	09/17/2026	25.00
AMAZON CAPITAL SERVICES	1LK7-HDDG-6	WALL CLOCK, HALLOWEEN DECORATION	09/29/2026	39.07
Total 603-63-92100-3150 Office Supplies:				205.08
603-63-92300-2110 Engineering Services				
FORSTER ELECTRICAL ENGIN	27943	TECHNICAL ASSISTANCE FOR AIRPORT 35 KV CIRCUIT FOR S	08/27/2026	1,565.00
FORSTER ELECTRICAL ENGIN	27988	TECHNICAL ASSISTANCE FOR ASHTREE SUBSTATION FAULT	08/27/2026	450.00
FORSTER ELECTRICAL ENGIN	28080	TECHNICAL ASSISTANCE FOR AIRPORT 35 KV CIRCUIT FOR S	09/24/2026	2,215.00
Total 603-63-92300-2110 Engineering Services:				4,230.00
603-63-92300-2220 Other Professional Services				
MSA PROFESSIONAL SERVICE	032541	UPGRADE ELECTRIC GIS MAPPING	09/01/2026	339.20
DIGGERS HOTLINE INC	260 7 11402	ELECTRIC	07/31/2026	30.60
DIGGERS HOTLINE INC	260 8 11402	ELECTRIC	08/31/2026	30.16
DIGGERS HOTLINE INC	260 9 11402	ELECTRIC	09/30/2026	27.28
ITRON	741855	ITRON ANNUAL MAINTENANCE AGREEMENT	09/11/2026	2,976.39
BOARDMAN & CLARK LAW FIR	323584	LEGAL FEES FOR UTILITIES PROJECT	09/17/2026	1,981.56
INTEGRATED SOLUTIONS INC	CW-31517	SEPTEMBER 2026 MANAGED SERVICES	09/14/2026	475.09
INTEGRATED SOLUTIONS INC	CW-31605	OCTOBER 2026 MANAGED SERVICES	10/07/2026	475.09
Total 603-63-92300-2220 Other Professional Services:				6,335.37
603-63-92800-2220 Other Professional Services				
PUBLIC SERVICE COMMISSION	2608-I-01200	REPORT LATE FILING FEE	09/18/2026	29.44
Total 603-63-92800-2220 Other Professional Services:				29.44
603-63-93000-2270 Water And Electricity Expenses				
CLINTONVILLE UTILITIES	11-0540-00-09-	65 E 12TH ST	09/30/2026	205.85
CLINTONVILLE UTILITIES	11-0545-00-09-	55 E 12TH STREET	09/30/2026	1,359.69
CLINTONVILLE UTILITIES	7-0550-00-09-2	260 7TH ST.	09/30/2026	54.18
CLINTONVILLE UTILITIES	7-0550-00-09-2	260 7TH ST.	10/07/2026	12.68

Vendor Name	Invoice Number	Description	Invoice Date	Net Invoice Amount
Total 603-63-93000-2270 Water And Electricity Expenses:				1,632.40
603-63-93000-2300 Contracted Services				
ELAN FINANCIAL SERVICES	AUGUST 2026	ELECTRIC SCADA SYSYTEM	09/02/2026	200.00
GFL ENVIRONMENTAL	R10000226446	GARBAGE/RECYCLING: 55 E 12TH ST	09/17/2026	66.00
Total 603-63-93000-2300 Contracted Services:				266.00
603-63-93000-3161 Training Expenses				
NORTHEAST WI TECHNICAL C	SPINV003445-	TUITION - M. FRANK, AND T. MILLER	09/21/2026	2,287.53
Total 603-63-93000-3161 Training Expenses:				2,287.53
603-63-93000-3460 Clothing And Uniforms				
AMAZON CAPITAL SERVICES	17CH-CH1V-1	CLOTHES DETERGENT	09/09/2026	13.19
JB TOOLS INC.	1530265	LEATHER GLOVES	09/07/2026	137.92
Total 603-63-93000-3460 Clothing And Uniforms:				151.11
603-63-93300-3510 Gas And Oil				
KWIK TRIP INC	SEPTEMBER 2	ELECTRIC	09/30/2026	1,523.59
Total 603-63-93300-3510 Gas And Oil:				1,523.59
603-63-93300-3554 Vehicle Repair/Maintenance				
POMP'S TIRE SERVICE INC	170103267	NEW TIRES FOR 2015 CHEVY 2500	10/05/2026	523.22
AMAZON CAPITAL SERVICES	1DD6-GWRT-G	TORO LAWNMOWER BACK TIRES	09/24/2026	90.20
Total 603-63-93300-3554 Vehicle Repair/Maintenance:				613.42
603-63-93500-3490 Other Operating Expenses				
ELAN FINANCIAL SERVICES	219271	MILWAUKEE TOOLS RETURN	09/29/2026	84.15
ELAN FINANCIAL SERVICES	2257	SHOP SUPPLIES / CLEANING CHEMICALS	09/08/2026	20.14
ELAN FINANCIAL SERVICES	3058	KEYS DUPLICATES FOR SHOP	08/31/2026	5.97
STUART C IRBY COMPANY (OP	SO14695462.0	NEW SHOP TOOLS	09/15/2026	2,142.04
STUART C IRBY COMPANY (OP	SO14695496.0	NEW SHOP TOOLS	09/17/2026	2,524.24
AMAZON CAPITAL SERVICES	116N-J7DM-LL	SHOLDER STRAP FOR WEED EATER	09/01/2026	17.39
AMAZON CAPITAL SERVICES	19NW-L3J4-74	GARDEN HOSE SHUT OFF VALVES FOR SHOP	09/23/2026	30.19
Total 603-63-93500-3490 Other Operating Expenses:				4,824.12
Total 603:				1,128,730.19
604				
604-34800 Hydrants Water Plant				
CORE & MAIN	Z699537	#30 HYDRANT BRONZE CROSSARM	09/10/2026	623.15
Total 604-34800 Hydrants Water Plant:				623.15
604-64-40800-3242 PSC Remainder Assessment				
PUBLIC SERVICE COMMISSION	RA27-I-01200	PSC REMAINDER ASSESSMENT	09/29/2026	1,438.46
Total 604-64-40800-3242 PSC Remainder Assessment:				1,438.46
604-64-60500-2300 Contracted Services				
INSOURCE SOFTWARE SOLUTI	EST40201	WIN-911 ANNUAL CUSTOMER CARE SUPPORT	09/18/2026	1,200.00

Vendor Name	Invoice Number	Description	Invoice Date	Net Invoice Amount
Total 604-64-60500-2300 Contracted Services:				1,200.00
604-64-60500-3490 Other Operating Expenses				
NORTHERN LAKE SERVICE INC	2615684	LEAD & COPPER SAMPLE	09/02/2026	66.20
NORTHERN LAKE SERVICE INC	2617860	WATER SAMPLES FOR TTHM AND HAA5	10/02/2026	214.78
SPEE-DEE DELIVERY SERVICE	1535493	SAMPLE SHIPPING	08/29/2026	19.91
SPEE-DEE DELIVERY SERVICE	1545076	SAMPLE SHIPPING	09/05/2026	20.00
SPEE-DEE DELIVERY SERVICE	1549983	SAMPLE SHIPPING	09/19/2026	20.12
Total 604-64-60500-3490 Other Operating Expenses:				341.01
604-64-62200-2270 Water And Electricity Expenses				
CLINTONVILLE UTILITIES	10-2195-00-09-	WELL #6	09/30/2026	825.40
CLINTONVILLE UTILITIES	16-0851-00-09-	WELL #2	09/30/2026	243.93
CLINTONVILLE UTILITIES	16-0852-00-09-	WELL #1	09/30/2026	117.82
CLINTONVILLE UTILITIES	16-0853-00-09-	WELL #3	09/30/2026	203.35
CLINTONVILLE UTILITIES	7-0385-00-09-2	WELL #7	09/30/2026	367.80
Total 604-64-62200-2270 Water And Electricity Expenses:				1,758.30
604-64-62500-7001 Equipment Replacement - Wells				
AMAZON CAPITAL SERVICES	16FC-WH7C-K	ANTI-SIPHON VACUUM BREAKER FOR WELL 6	10/05/2026	53.30
Total 604-64-62500-7001 Equipment Replacement - Wells:				53.30
604-64-63100-3551 Chemicals				
HAWKINS INC	7560149	WATER CHEMICALS	09/09/2026	577.59
Total 604-64-63100-3551 Chemicals:				577.59
604-64-63200-3490 OTHER OPERATING EXPENSES				
CLINTONVILLE UTILITIES	6-0249-00-09-2	WATER TREATMENT PLANT	09/30/2026	717.37
Total 604-64-63200-3490 OTHER OPERATING EXPENSES:				717.37
604-64-65000-3490 Other Operating Expenses				
CLINTONVILLE UTILITIES	16-0206-00-09-	WATER TOWER	09/30/2026	12.60
Total 604-64-65000-3490 Other Operating Expenses:				12.60
604-64-65200-2300 Contracted Services				
PETERS CONCRETE	2267469	2 YARDS FOR APRON AT 181 ROBERTS STREET	09/02/2026	313.00
CORE & MAIN	Z699537	LATERAL REPAIR PARTS AND BOXES	09/10/2026	2,656.15
Total 604-64-65200-2300 Contracted Services:				2,969.15
604-64-65300-2300 Contracted Services				
B & D WATER METER TESTING	826	ANNUAL TESTING LARGE WATER METERS	08/12/2026	2,731.00
Total 604-64-65300-2300 Contracted Services:				2,731.00
604-64-90300-3110 Postage				
UNITED MAILING SERVICES IN	235733	POSTAGE UTILITY BILLS	09/08/2026	606.10
Total 604-64-90300-3110 Postage:				606.10

Vendor Name	Invoice Number	Description	Invoice Date	Net Invoice Amount
604-64-90300-3121 Safety Equipment				
AMAZON CAPITAL SERVICES	1NJX-HRJT-77	HARD HAT LED LIGHTS	09/24/2026	16.00
Total 604-64-90300-3121 Safety Equipment:				16.00
604-64-92100-2100 Computer Expenses				
ELAN FINANCIAL SERVICES	01111809754	INTERNET FOR 55 E. 12TH STREET	08/28/2026	48.00
ELAN FINANCIAL SERVICES	0606870199	INTERNET FOR 55 E. 12TH STREET	09/28/2026	48.00
CHARTER COMMUNICATIONS	171723301092	OCTOBER 2026 INTERNET	09/21/2026	17.78
Total 604-64-92100-2100 Computer Expenses:				113.78
604-64-92100-2250 Telephone Expenses				
ELAN FINANCIAL SERVICES	AUGUST 2026	ROBO CALLS	09/02/2026	33.34
AT&T MOBILITY II LLC	287305595089	250-0358	09/11/2026	6.64
AT&T MOBILITY II LLC	287305595089	250-0200	09/11/2026	32.21
AT&T MOBILITY II LLC	287305595089	250-1412	09/11/2026	32.21
AT&T MOBILITY II LLC	287305595089	460-1722	09/11/2026	30.11
Total 604-64-92100-2250 Telephone Expenses:				134.51
604-64-92100-3150 Office Supplies				
US BANK EQUIPMENT FINANCE	592289797	COPIER LEASE	10/01/2026	70.51
AMAZON CAPITAL SERVICES	1LK7-HDDG-6	WALL CLOCK, HALLOWEEN DECORATION	09/29/2026	19.54
Total 604-64-92100-3150 Office Supplies:				90.05
604-64-92300-2220 Other Professional Services				
MSA PROFESSIONAL SERVICE	032541	UPGRADE WATER GIS MAPPING	09/01/2026	147.20
DIGGERS HOTLINE INC	260 7 11402	WATER	07/31/2026	20.40
DIGGERS HOTLINE INC	260 8 11402	WATER	08/31/2026	20.10
DIGGERS HOTLINE INC	260 9 11402	WATER	09/30/2026	18.18
ITRON	741855	ITRON ANNUAL MAINTENANCE AGREEMENT	09/11/2026	992.12
BOARDMAN & CLARK LAW FIR	323584	LEGAL FEES FOR UTILITIES PROJECT	09/17/2026	660.52
INTEGRATED SOLUTIONS INC	CW-31517	SEPTEMBER 2026 MANAGED SERVICES	09/14/2026	187.34
INTEGRATED SOLUTIONS INC	CW-31605	OCTOBER 2026 MANAGED SERVICES	10/07/2026	187.34
Total 604-64-92300-2220 Other Professional Services:				2,233.20
604-64-92800-2220 Other Professional Services				
PUBLIC SERVICE COMMISSION	2608-I-01200	REPORT LATE FILING FEE	09/18/2026	19.62
Total 604-64-92800-2220 Other Professional Services:				19.62
604-64-93000-2270 Water And Electricity Expenses				
CLINTONVILLE UTILITIES	11-0540-00-09-	65 E 12TH ST	09/30/2026	137.24
CLINTONVILLE UTILITIES	11-0545-00-09-	55 E 12TH STREET	09/30/2026	906.46
CLINTONVILLE UTILITIES	7-0550-00-09-2	260 7TH ST.	09/30/2026	36.12
CLINTONVILLE UTILITIES	7-0550-00-09-2	260 7TH ST.	10/07/2026	8.45
Total 604-64-93000-2270 Water And Electricity Expenses:				1,088.27
604-64-93000-2300 Contracted Services				
THEDACARE AT WORK	388598	EAP FFS CLINICAL SESSION	09/01/2026	400.00
GFL ENVIRONMENTAL	R10000226446	GARBAGE/RECYCLING: 55 E 12TH ST	09/17/2026	44.00
Total 604-64-93000-2300 Contracted Services:				444.00

Vendor Name	Invoice Number	Description	Invoice Date	Net Invoice Amount
604-64-93000-3460 Clothing And Uniforms				
AMAZON CAPITAL SERVICES	17CH-CH1V-1	CLOTHES DETERGENT	09/09/2026	8.79
JB TOOLS INC.	1530265	LEATHER GLOVES	09/07/2026	91.94
Total 604-64-93000-3460 Clothing And Uniforms:				100.73
604-64-93300-3510 Gas And Oil				
KWIK TRIP INC	SEPTEMBER 2	WATER	09/30/2026	344.77
Total 604-64-93300-3510 Gas And Oil:				344.77
604-64-93300-3554 Vehicle Repair/Maintenance				
POMP'S TIRE SERVICE INC	170103267	NEW TIRES FOR 2015 CHEVY 2500	10/05/2026	174.41
STEINKE AUTO INC	56927	REPAIR TIRE ON RAM 1500 W03	09/30/2026	25.00
O'REILLY AUTO PARTS	2204-431017	REPLACEMENT LUG NUTS FOR TORO	09/22/2026	5.30
AMAZON CAPITAL SERVICES	1DD6-GWRT-G	TORO LAWNMOWER BACK TIRES	09/24/2026	30.07
Total 604-64-93300-3554 Vehicle Repair/Maintenance:				234.78
604-64-93500-3490 Other Operating Expenses				
ELAN FINANCIAL SERVICES	219271	MILWAUKEE TOOLS RETURN	09/29/2026	56.10
ELAN FINANCIAL SERVICES	2257	SHOP SUPPLIES / CLEANING CHEMICALS	09/08/2026	6.72
ELAN FINANCIAL SERVICES	5237	GLUE	09/08/2026	3.99
STUART C IRBY COMPANY (OP	SO14695462.0	NEW SHOP TOOLS	09/15/2026	1,428.02
STUART C IRBY COMPANY (OP	SO14695496.0	NEW SHOP TOOLS	09/17/2026	1,682.82
AMAZON CAPITAL SERVICES	116N-J7DM-LL	SHOLDER STRAP FOR WEED EATER	09/01/2026	5.80
AMAZON CAPITAL SERVICES	19NW-L3J4-74	GARDEN HOSE SHUT OFF VALVES FOR SHOP	09/23/2026	20.13
Total 604-64-93500-3490 Other Operating Expenses:				3,203.58
Total 604:				21,051.32
610				
61023523008101 [Does not exist]				
BELCO VEHICLE SOLUTIONS L	12019	875 PD CONVERSION	10/01/2026	13,373.92
Total 61023523008101 [Does not exist]:				13,373.92
61023523008104 [Does not exist]				
AMAZON CAPITAL SERVICES	1GQR-VVWK-	CABINETS - ORDER CANCELLED	10/03/2026	2,204.80-
AMAZON CAPITAL SERVICES	1P4V-16JR-HQ	AIR COMPRESSOR STATION 2	10/05/2026	1,005.04
AMAZON CAPITAL SERVICES	1VG4-GRVL-P	CABINETS - STORAGE	10/03/2026	3,495.91
Total 61023523008104 [Does not exist]:				2,296.15
Total 610:				15,670.07
805				
805-41-55110-3492 GIFT & MEMORIAL EXPENSES				
ELAN FINANCIAL SERVICES	1967-8366	KIDS KITCHEN SET	08/25/2026	1,284.99
Total 805-41-55110-3492 GIFT & MEMORIAL EXPENSES:				1,284.99
Total 805:				1,284.99
Grand Totals:				1,424,674.25

Vendor Name	Invoice Number	Description	Invoice Date	Net Invoice Amount

DEPARTMENT CODE (DD)

Account Format XXX-DD-XXXXX or XXX-DD-XXXXX-XXXX

10 - Administration
20 - Police
21 - Fire
23 - Ambulance
30 - Public Works
40 - Park & Rec
41 - Library
50 - Airport
62 - Wastewater
63 - Electric
64 - Water

Report Criteria:
Detail report.
Invoices with totals above $0 included.
Only unpaid invoices included.

Distribution Summary

Category	Distribution	Amount
AR PAYMENT INV.	AR PAYMENT	21,316.55
ELECTRIC	ELECT METER RECONNECT/INSTALL	735.00
ELECTRIC	NSF CHARGE - 60%	9.00
EXCISE TAX REBATE	POLICE	.00
UTILITY PAYMENT	UTILITY PAYMENT	1,027,225.31
WATER	CELL TOWER	3,798.51
WATER	NSF CHARGE - 40%	6.00
Grand Totals:		1,053,090.37

Professional Services Agreement

MSA Project Number: 08412036

This AGREEMENT (Agreement) is made effective 10/06/2026 by and between

MSA PROFESSIONAL SERVICES, INC (MSA)
Address: 2901 E. Enterprise Avenue, Appleton, WI 54913
Phone: (920) 545-2083
Representative: Stephen Tremlett Email: stremlett@msa-ps.com

CITY OF CLINTONVILLE (OWNER)
Address: 50 10th Street, Clintonville, WI 54929
Phone: (715) 823-7600
Representative: Craig Moser Email: CMoser@clintonvillewi.gov

Project Name: Clintonville 2026-2027 ZA Services

The scope of the work authorized is: See Attachment A: Scope of Services

The schedule to perform the work is: Approximate Start Date: 10/06/2026
Approximate Completion Date: 12/31/2027

The estimated fee for the work is: $30,000

All services shall be performed in accordance with the General Terms and Conditions of MSA, which is attached and made part of this Agreement. Any attachments or exhibits referenced in this Agreement are made part of this Agreement. Payment for these services will be on a time and expense basis. Attachment B: Rate Schedule is attached and made part of this Agreement

Approval: Authorization to proceed is acknowledged by signatures of the parties to this Agreement.

CITY OF CLINTONVILLE

Craig Moser
City Administrator
Date:

MSA PROFESSIONAL SERVICES, INC.

Stephen Tremlett
Planning Team Leader
Date: 10/06/2026

OWNER ATTEST: (optional)

Owner Attest:
Title:
Date:

MSA PROFESSIONAL SERVICES, INC. (MSA)
GENERAL TERMS AND CONDITIONS OF SERVICES (PLANNING) (rev 11/25)

1. **Scope and Fee.** The scope of Owner's Project (the "Project"), scope of MSA's services (the "Work"), for those services are defined in Attachment A. The scope and fee constitute a good faith estimate of the tasks and associated fees required to perform the services defined in Attachment A. This agreement upon execution by both parties hereto, can be amended only by written instrument signed by both parties. For those projects involving conceptual or process development service or involve renovation of an existing building or structure, activities often cannot be fully defined during initial planning. As the Project progresses, facts uncovered may reveal a change in direction which may alter the Work. MSA will promptly inform the OWNER in writing of such situations so that changes in this agreement can be made as required.

2. **Owner's Responsibilities**.

(a) Project Scope and Budget

The OWNER shall define the scope and budget of the Project and, when applicable, periodically update the Project budget, including that portion allocated for the cost of the Work. The Project budget shall include contingencies for design, development, and, when required by the scope of the Project, construction of the Project. The OWNER shall not significantly increase or decrease the overall Project scope or schedule, the portion of the budget allocated for the cost of the Work, or contingencies included in the overall budget or a portion of the budget, without the agreement of MSA to a corresponding change in the Project scope, quality, schedule, and compensation of MSA.

(b) Designated Owner Representative

The OWNER shall identify a Designated Representative who shall be authorized to act on behalf of the OWNER with respect to the Project. OWNER's Designated Representative shall render related decisions in a timely manner so as to avoid unreasonable delay in the orderly and sequential progress of MSA's services. MSA shall not be liable for any error or omission made by OWNER, OWNER's Designated Representative, or OWNER's consultant.

(c) Tests, Inspections, and Reports

When required by the scope of the Project, the OWNER shall furnish tests, inspections, and reports required by law or the Contract Documents, such as planning studies; preliminary designs; structural, mechanical, or chemical tests; tests for air, water, or soil pollution; and tests for hazardous materials.

(d) Additional Consultants

MSA's consultants shall be identified in Attachment A. The OWNER shall furnish the services of other consultants other than those designated in Attachment A, including such legal, financial, accounting, and insurance counseling services as may be required for the Project.

(e) OWNER Provided Services and Information

MSA shall be entitled to rely on the accuracy and completeness of services and information furnished by the OWNER, Designated OWNER Representative, or Consultant. MSA shall use reasonable efforts to provide prompt written notice to the OWNER if MSA becomes aware of any errors, omissions, or inconsistencies in such services or information.

3. **Billing.** MSA will bill the OWNER monthly with net payment due upon receipt. Balances due past thirty (30) days shall be subject to an interest charge at a rate of 18% per year from said thirtieth day. In addition, MSA may, after giving seven days written notice, suspend service under any agreement until the OWNER has paid in full all amounts due for services rendered and expenses incurred, including the interest charge on past due invoices.

4. **Costs and Schedules.** Costs (including MSA's fees and reimbursable expenses) and schedule commitments shall be subject to change for delays caused by the OWNER's failure to provide specified facilities or information or for delays caused by unpredictable occurrences including, without limitation, fires, floods, riots, strikes, unavailability of labor or materials, delays or defaults, by suppliers of materials or services, process shutdowns, pandemics, acts of God or the public enemy, or acts of regulations of any governmental agency. Temporary delays of services caused by any of the above which result in additional costs beyond those outlined may require renegotiation of this agreement.

5. **Location of Utilities.** Owner shall supply MSA with the location of all pre-existent utilities and MSA has the right to reasonably rely on all Owner supplied information.

6. **Professional Representative.** MSA intends to serve as the OWNER's professional representative for those services as defined in this agreement, and to provide advice and consultation to the OWNER as a professional. Any opinions of probable project costs, reviews and observations, and other recommendations made by MSA for the OWNER are rendered on the basis of experience and qualifications and represents the professional judgment of MSA. However, MSA cannot and does not warrant or represent that proposals, bid or actual project or construction costs will not vary from the opinion of probable cost prepared by it.

7. **Standard of Care.** In conducting the services, MSA will apply present professional, engineering and/or scientific judgment, which is known as the "standard of care". The standard of care is defined as that level of skill and care ordinarily exercised by members of the same profession practicing at the same point in time and in the same or similar locality under similar circumstances in performing the Services. The OWNER acknowledges that "current professional standards" shall mean the standard for professional services, measured as of the time those services are rendered, and not according to later standards, if such later standards purport to impose a higher degree of care upon MSA.

MSA does not make any warranty or guarantee, expressed or implied, nor have any agreement or contract for services subject to the provisions of any uniform commercial code. Similarly, MSA will not accept those terms and conditions offered by the OWNER in its purchase order, requisition, or notice of authorization to proceed, except as set forth herein or expressly agreed to in writing. Written acknowledgement of receipt, or the actual performance of services subsequent to receipt of such purchase order, requisition, or notice of authorization to proceed is specifically deemed not to constitute acceptance of any terms or conditions contrary to those set forth herein.

8. **Municipal Advisor**. MSA Professional Services, Inc. is not acting as a 'Municipal Advisor' to the owner pursuant to Section 15B of the Exchange Act. For financial advice related to the corresponding project, the client is encouraged to discuss their finances with internal and/or external advisors and experts before making decisions incurring debt and/or supporting those obligations. MSA desires to serve each client well by providing the best information publicly available and is providing information as part of its engineering responsibilities to inform client options. The information is not intended to provide financial advice or recommendations and is not bound by the formal Municipal Advisor fiduciary duty.

9. **Conduct Expectations.** Owner and MSA understand their respective obligations to provide a safe, respectful work environment for their employees. Both parties agree that harassment on the job (unwelcome verbal, physical or other behavior that is related to sex, race, age, or protected class status) will not be tolerated and will be addressed timely and in compliance with anti-harassment laws.

10. **Electronic Documents and Transmittals**. Owner and MSA agree to transmit and accept project related correspondence, documents, text, data, drawings and the like in digital format in accordance with MSA's Electronic Data Transmittal policy. Each party is responsible for its own cybersecurity, and both parties waive the right to pursue liability against the other for any damages that occur as a direct result of electronic data sharing.

11. **Building Information Modelling (BIM).** For any projects, and not limited to building projects, utilizing BIM, OWNER and MSA shall agree on the appropriate level of modelling required by the project, as well as the degree to which the BIM files may be made available to any party using the Electronic Document Transmittal provisions of section 10 of this Agreement.

12. **Termination.** This Agreement shall commence upon execution and shall remain in effect until terminated by either party, at such party's discretion, on not less than thirty (30) days' advance written notice. The effective date of the termination is the thirtieth day after the non-terminating party's receipt of the notice of termination. If MSA terminates the Agreement, the OWNER may, at its option, extend the terms of this Agreement to the extent necessary for MSA to complete any services that were ordered prior to the effective date of termination. If OWNER terminates this Agreement, OWNER shall pay MSA for all services performed prior to MSA's receipt of the notice of termination and for all work performed and/or expenses incurred by MSA in terminating Services begun after MSA's receipt of the termination notice. Termination hereunder shall operate to discharge only those obligations which are executory by either party on and after the effective date of termination. These General Terms and Conditions shall survive the completion of the services performed hereunder or the Termination of this Agreement for any cause.

This agreement cannot be changed or terminated orally. No waiver of compliance with any provision or condition hereof should be effective unless agreed in writing and duly executed by the parties hereto.

13. **Betterment.** If, due to MSA's error, any required or necessary item or component of the Project is omitted from the construction documents, MSA's liability shall be limited to the reasonable costs of correction of the construction, less what OWNER'S cost of including the omitted item or component in the original construction would have been had the item or component not been omitted. It is intended by this provision that MSA will not be responsible for any cost or expense that provides betterment, upgrade, or enhancement of the Project.

14. **Hazardous Substances.** OWNER acknowledges and agrees that MSA has had no role in identifying, generating, treating, storing, or disposing of hazardous substances or materials which may be present at the Project site, and MSA has not benefited from the processes that produced such hazardous substances or materials. Any hazardous substances or materials encountered by or associated with Services provided by MSA on the Project shall at no time be or become the property of MSA. MSA shall not be deemed to possess or control any hazardous substance or material at any time; arrangements for the treatment, storage, transport, or disposal of any hazardous substances or materials, which shall be made by MSA, are made solely and exclusively on OWNER's behalf for OWNER's benefit and at OWNER's direction. Nothing contained within this Agreement shall be construed or interpreted as requiring MSA to assume the status of a generator, storer, treater, or disposal facility as defined in any federal, state, or local statute, regulation, or rule governing treatment, storage, transport, and/or disposal of hazardous substances or materials.

All samples of hazardous substances, materials or contaminants are the property and responsibility of OWNER and shall be returned to OWNER at the end of a project for proper disposal. Alternate arrangements to ship such samples directly to a licensed disposal facility may be made at OWNER's request and expense and subject to this subparagraph.

15. **Insurance.** MSA will maintain insurance coverage for: Worker's Compensation, General Liability, and Professional Liability. MSA will provide information as to specific limits upon written request. If the OWNER requires coverages or limits in addition to those in effect as of the date of the agreement, premiums for additional insurance shall be paid by the OWNER. The liability of MSA to the OWNER for any indemnity commitments, or for any damages arising in any way out of performance of this contract is limited to such insurance coverages and amount which MSA has in effect.

16. **Reuse of Documents.** Reuse of any documents and/or services pertaining to this Project by the OWNER or extensions of this Project or on any other project shall be at the OWNER's sole risk. The OWNER agrees to defend, indemnify, and hold harmless MSA for all claims, damages, and expenses including attorneys' fees and costs arising out of such reuse of the documents and/or services by the OWNER or by others acting through the OWNER.

17. **Indemnification.** To the fullest extent permitted by law, MSA shall indemnify and hold harmless, OWNER, and OWNER's officers, directors, members, partners, consultants, and employees (hereinafter "OWNER") from reasonable claims, costs, losses, and damages arising out of or relating to the PROJECT, provided that any such claim, cost, loss, or damage is attributable to bodily injury, sickness, disease, or death, or to injury to or destruction of tangible property (other than the Work itself) including the loss of use resulting therefrom but only to the extent caused by any negligent act or omission of MSA or MSA's officers, directors, members, partners, employees, or Consultants (hereinafter "MSA"). In no event shall this indemnity agreement apply to claims between the OWNER and MSA. This indemnity agreement applies solely to claims of third parties. Furthermore, in no event shall this indemnity agreement apply to claims that MSA is responsible for attorneys' fees. This agreement does not give rise to any duty on the part of MSA to defend the OWNER on any claim arising under this agreement.

To the fullest extent permitted by law, OWNER shall indemnify and hold harmless, MSA, and MSA's officers, directors, members, partners, consultants, and employees (hereinafter "MSA") from reasonable claims, costs, losses, and damages arising out of or relating to the PROJECT, provided that any such claim, cost, loss, or damage is attributable to bodily injury, sickness, disease, or death, or to injury to or destruction of tangible property (other than the Work itself) including the loss of use resulting therefrom but only to the extent caused by any negligent act or omission of the OWNER or the OWNER's officers, directors, members, partners, employees, or Consultants (hereinafter "OWNER"). In no event shall this indemnity agreement apply to claims between MSA and the OWNER. This indemnity agreement applies solely to claims of third parties. Furthermore, in no event shall this indemnity agreement apply to claims that the OWNER is responsible for attorneys' fees.

This agreement does not give rise to any duty on the part of the OWNER to defend MSA on any claim arising under this agreement.

To the fullest extent permitted by law, MSA's total liability to OWNER and anyone claiming by, through, or under OWNER for any cost, loss or damages caused in part or by the negligence of MSA and in part by the negligence of OWNER or any other negligent entity or individual, shall not exceed the percentage share that MSA's negligence bears to the total negligence of OWNER, MSA, and all other negligent entities and individuals.

18. **Accrual of Claims**. To the fullest extent permitted by Laws and Regulations, all causes of action arising under this Agreement will be deemed to have accrued, and all statutory periods of limitation will commence, no later than the date of Substantial Completion; or, if MSA's services do not include Construction Phase services, or the Project is not completed, then no later than the date of Owner's last payment to MSA.

19. **Dispute Resolution.** OWNER and MSA desire to resolve any disputes or areas of disagreement involving the subject matter of this Agreement by a mechanism that facilitates resolution of disputes by negotiation rather than by litigation. OWNER and MSA also acknowledge that issues and problems may arise after execution of this Agreement which were not anticipated or are not resolved by specific provisions in this Agreement. Accordingly, both OWNER and MSA will endeavor to settle all controversies, claims, counterclaims, disputes, and other matters thru mediation with a mutually agreed upon mediator. Demand for mediation shall be filed in writing with the other party to this Agreement. A demand for mediation shall be made within a reasonable time after the claim, dispute or other matter in question has arisen. In no event shall the demand for mediation be made after the date when institution of legal or equitable proceedings based on such claim, dispute or other matter in question would be barred by the applicable statute of limitations. Neither demand for mediation nor any term of this Dispute Resolution clause shall prevent the filing of a legal action where failing to do so may bar the action because of the applicable statute of limitations. If despite the good faith efforts of OWNER and MSA any controversy, claim, counterclaim, dispute, or other matter is not resolved through negotiation or mediation, OWNER and MSA agree and consent that such matter may be resolved through legal action in the court having jurisdiction as specified in this Agreement.

20. **Exclusion of Special, Indirect, Consequential and Liquidated Damages.** MSA shall not be liable, in contract or tort or otherwise, for any special, indirect, consequential, or liquidated damages including specifically, but without limitation, loss of profit or revenue, loss of capital, delay damages, loss of goodwill, claim of third parties, or similar damages arising out of or connected in any way to the Project or this contract.

21. **Limitation of Liability.** Neither MSA, its Consultants (if any), nor their employees shall be jointly, severally, or individually liable to the OWNER in excess of the amount of the insurance proceeds available.

22. **Successors and Assigns**. The successors, executors, administrators, and legal representatives of Owner and MSA are hereby bound to the other party to this Agreement and to the successors, executors, administrators and legal representatives (and said assigns) of such other party, in respect of all covenants, agreements, and obligations of this Agreement. Neither party may assign, sublet, or transfer any rights under or interest (including, but without limitation, claims arising out of this Agreement or money that is due or may become due) in this Agreement without the written consent of the other party, which shall not be unreasonable withheld, except to the extent that any assignment, subletting, or transfer is mandated by law.

23. **Notices**. Any notice required under this Agreement will be in writing, and delivered: in person (by commercial courier or otherwise); by registered or certified mail; or by e-mail to the recipient, with the words "Formal Notice" or similar in the e-mail's subject line. All such notices are effective upon the date of receipt.

24. **Survival.** Subject to applicable Laws and Regulations, all express representations, waivers, indemnifications, and limitations of liability included in this Agreement will survive its completion or termination for any reason.

25. **Severability**. Any provision or part of the Agreement held to be void or unenforceable under any Laws or Regulations will be deemed stricken, and all remaining provisions will continue to be valid and binding upon Owner and MSA.

26. **No Waiver**. A party's non-enforcement of any provision will not constitute a waiver of that provision, nor will it affect the enforceability of that provision or of the remainder of this Agreement.

27. **State Law.** This agreement shall be construed and interpreted in accordance with the laws of the State of Wisconsin.

28. **Jurisdiction.** OWNER hereby irrevocably submits to the jurisdiction of the state courts of the State of Wisconsin for the purpose of any suit, action or other proceeding arising out of or based upon this Agreement.

OWNER further consents that the venue for any legal proceedings related to this Agreement shall be Sauk County, Wisconsin.

29. **Understanding.** This agreement contains the entire understanding between the parties on the subject matter hereof and no representations. Inducements, promises or agreements not embodied herein (unless agreed in writing duly executed) shall be of any force or effect, and this agreement supersedes any other prior understanding entered into between the parties on the subject matter hereto.

ATTACHMENT A:
SCOPE OF SERVICES

MSA, as the Zoning and Planning Administrator, will perform the services and tasks outlined below using standard staff rate.

- General consulting, as directed, on an as-needed basis.
- Review zoning, planning, and signage applications and issue permits.
- Attend Plan Commission meetings either in-person (by Diane) or remote (by John/Steve), unless requested for others to attend in-person.
- Serve in an advisory role to the Plan Commission.
- Respond to the requests of the City's residents and property owners as needed.
- Provide plan review, consultation, and attendance at meetings, hearings, and any other service to developers and petitioners in the City to assure compliance with City codes.
- Coordinate matters and questions raised by the Plan Commission, Common Council, city staff, building inspector, and city attorney.
- Prepare related resolutions and ordinances as directed by the Plan Commission or Common Council.
- Update City maps as needed.
- Advise the Common Council and Plan Commission on amendments to appropriate sections of the Municipal Code, Zoning Code, Comprehensive and Land Use Plans.
- Attend Board of Appeals, Common Council, or other City meetings as requested.
- Review correspondence and documents forwarded to the City by various agencies and report to the Plan Commission on same.
- Review and consult on items related to new development proposals, subdivision plats/plans, certified survey maps, conditional use permits, variance requests, rezone requests, annexation petitions, land division requests, and planned unit developments.
- Can also assist with engineering review and TIF evaluation, if requested

ATTACHMENT B:
RATE SCHEDULE

Administrative	$ 90 – $160/hr.
Architects	$ 90 – $208/hr.
Community Development Specialists	$144 – $208/hr.
Digital Design	$121 – $159/hr.
Environmental Scientists/Geologists	$116 – $203/hr.
Geographic Information Systems (GIS)	$105 – $203/hr.
Housing Administration	$ 97 – $198/hr.
Inspectors/Zoning Administrators	$115 – $160/hr.
IT Support	$184 – $203/hr.
Land Surveying	$ 90 – $208/hr.
Landscape Designers & Architects	$ 90 – $231/hr.
Planners	$ 90 – $226/hr.
Principals	$230 – $330/hr.
Professional Engineers/Designers of Engineering Systems	$163 – $214/hr.
Project Managers	$126 – $259/hr.
Real Estate Professionals	$147 – $203/hr.
Staff Engineers	$ 90 – $157/hr.
Technicians	$105 – $159/hr.
Utility Treatment Operators	$ 90 - $190/hr.

Labor rates represent an average or range for a particular job classification. These rates are in effect until December 31, 2026.

REIMBURSABLE EXPENSES (effective April 19, 2026)

Building Inspection Permit Management	$25/permit
Copies/Prints	Rate based on volume
Specs/Reports	$10
Copies	$0.20/page | $0.13/page for DOT
Plots	$0.01/sq.in.
Flash Drive	$10
Dini Laser Level	$85/per day | $85/day for DOT
Drone Flight	$375/flight | $250/flight for DOT
Geodimeter	$30/hour
GPS Equipment	$20/hour | $18/hour for DOT
GPS R2 Equipment	$20/hour | $18/hour for DOT
Mailing/UPS	At cost
Mileage – Reimbursement	IRS Rate – IRS Rate + $5/day
Mileage – MSA Vehicle	$0.77/mile | $0.77/mile for DOT
Nuclear Density Testing	$45/day | $45/day for DOT
Organic Vapor Field Meter	$100/day
PC/CADD Machine	Included in labor rates
Robotic Survey Equipment	$20/hour | $14/hour for DOT
Stakes/Lath/Rods	At cost
Travel Expenses, Lodging, & Meals	At cost
Traffic Counting Equipment & Data Processing	At cost

Expense rates represent an average or range for a particular category and are subject to change to match incurred cost in real time.

Memo

To: Finance and Personnel Committee

From:

Meeting Date: October 12, 2026

Subject: 2027 Preliminary Proposed Fee Schedule

Memo:

Attachments:

1. 10.13.2026 2027 Preliminary Proposed Fee Schedule

Memo

To:	Finance and Personnel Committee
From:	Craig Moser, City Administrator
Meeting Date:	October 12, 2026
Subject:	2027 Preliminary Proposed Fee Schedule

The 2027 Preliminary Proposed Fee Schedule will be distributed to Committee members at the October 12th meeting for review prior to the Special Budget Meeting of the Finance and Personnel Committee scheduled for Monday, October 26th.

2027 LEASE AGREEMENT
HANGAR 440

THIS 2027 LEASE AGREEMENT, is made and entered into this 1st day of January, effective **January 1, 2027**, by and between the CITY OF CLINTONVILLE, State of Wisconsin, a municipal corporation, existing by and under the authority of the laws of the State of Wisconsin, hereinafter referred to as "Lessor", party of the first part, and **Jeff Reabe d/b/a REABE AIRCRAFT IMPROVEMENT**, hereinafter referred to as the "Lessee", party of the second part.

WHEREAS, Lessor owns and operates an airport known as the Clintonville Municipal Airport and is desirous of leasing to Lessee certain premises hereinafter more fully described located on said airport, together with the right to use and enjoy individually and in common with others the facilities referred to; and

WHEREAS, for and in consideration of the rents, covenants and agreements herein contained, the Lessor does hereby lease, demise and let to the Lessee and the Lessee does hereby hire, take and lease from Lessor the following described premises upon the following terms and conditions:

1. Premises. The Lessor does hereby demise and let to the Lessee and Lessee does hereby accept as tenants of the Lessor the premises described as follows: Designated area of the Municipal Hangar bay located at 440 7th Street and known as Hangar #440. The designated area is limited to the southwest half of the bay, as shown on Exhibit A.

2. Term. The term hereof shall be for **January 1, 2027 to December 31, 2027**. The Lessor and Lessee shall meet in August prior to the end of a lease to negotiate the following lease agreement or vacation of tenant. The Lessee may terminate this lease without penalty upon providing a minimum of a 30-day written notice to the Lessor of such cancellation.

3. Rent. As rent for said premises Lessee shall pay to Lessor at its offices located at 50 Tenth Street, Clintonville, Wisconsin 54929, **the sum of four hundred and 00/100 ($400.00) dollars per month, payable on the first (1st) day of each month, effective January 1, 2027**.

4. Repairs. Throughout the term of this lease, the Lessee shall take good care of the demised premises and appurtenances and suffer no waste or injury. The Lessee agrees to repair and/or replace in-kind any damage the Lessee causes to the structure, premises, fixtures and appurtenances as a result of the Lessee's actions or any party's action that the Lessee allows access to or use of these facilities and property. Such repairs and/or replacement in-kind shall be accomplished within 45 days of the damage occurring. The Lessee shall notify the Lessor of any damage that has occurred within 48 hours after the damage has occurred or was found by the Lessee. Lessee further agrees to repair, at or before the end of the term, all injury done by the installation or removal of Lessee's property, so as to restore the demised premises to their original state; and at the end of the term quit and surrender the demised premises in as good order and condition as they were at the beginning of the term, reasonable wear and damages by the elements excepted.

5. Use of Premises. Lessee covenants that it will not use the premises for any purpose in violation of any law, municipal ordinance or regulation, and that on any breach of this agreement the Lessor may, at its option, terminate this Lease forthwith and re-enter and repossess the demised premises. Lessee further covenants to keep all grass moved and snow removed within ten (10) feet of the southwest hangar bay of the hangar. It is further agreed, in the event these conditions are not complied with, the City may enter upon said premises to remove such rubbish, junk and debris, or to clip the grass, and bill the expense thereof to the Lessee. Lessee shall pay such bill upon presentation.

6. Damage. The Lessor shall not be liable to the Lessee for any damage done or occasioned by or from plumbing, gas, water, steam or other pipes, or sewerage, or the bursting, leaking or running of any cistern, tank washstand, water closet or waste pipe in, above, upon or about said building or premises, nor from operation or maintenance of the heating plant or boiler, nor for damage occasioned by water, snow or ice being upon or coming through the roof, sky-light, trap door or otherwise.

7. Inspection by Lessor. The Lessee agrees and covenants that the Lessor or its agent, at all reasonable times and during all reasonable hours, shall have free access to said demised premises, and throughout any building or structure that may at anytime be thereon, or any part thereof, for the purpose of examining or inspecting the conditions of the same, or of exercising any right or power reserved to the Lessor under the terms and provisions of this lease; provided, however, that the Lessor shall give Lessee 24 hours' notice of its intention to inspect as aforesaid.

8. Notices. For the purpose of this lease, notices shall be given by certified mail and shall be delivered to the parties at the following addresses:

Lessor: City Clerk-City Hall
50 Tenth Street
Clintonville, WI 54929

Lessee: Jeff Reabe
Reabe Aircraft Improvement
440 7th Street
Clintonville, WI 54929

Or at such other place as the parties hereto shall from time to time designate in writing.

9. Payment for Work done by or for Lessee. Lessee agrees that it will promptly pay for any work done by or for Lessee in or about the premises and will not permit or suffer any mechanic's lien to attach to the premises by reason of such work, and shall promptly cause any claim for such lien to be released, or to secure the Lessor to the satisfaction in the event the Lessee desires to contest any such claim.

10. Installation by Lessee. The Lessee may install removable partitions, counters, racks, shelving, machinery and equipment incidental to Lessee's trade and business, and other fixtures or equipment, all of which may be removed by the Lessee upon expiration of this lease; provided that the Lessee shall leave said removal, ordinary wear and tear excepted. The Lessee shall make no structural changes, additions, or improvements on or in the building or premises without the written consent of the Lessor.

11. Damage by Fire. In case the premises hereby leased shall be partially damaged by fire or other cause at anytime during the said term, they shall be repaired by the Lessor or any insurance company on its behalf, with all reasonable dispatch, and a proportionate reduction of rent shall be allowed the Lessee for the time occupied in such repairs excepting:

(a) If the Lessee can use and occupy the demised premises without substantial inconvenience, there shall be no reduction of rent; and

(b) If said repairs are delayed because of the failure of the said Lessee to adjust its own insurance, no reduction shall be made beyond a reasonable time allowed for such adjustment.

(c) In case the damage by fire or other cause shall account substantially to the destruction of the premises hereby leased, then and in that event this lease shall become null and void and the responsibilities of the Lessor and Lessee, with reference to the unexpired term, shall cease.

12. Subletting or Assignment. The Lessee shall neither sublet all or any part of the demised premises nor assign this lease without the prior written consent of the Lessor.

13. Miscellaneous.

a. Lessee covenants and agrees that it is an independent contractor and no relationship of employer-employee exists between Lessor and Lessee.

b. Lessee agrees to obey all lawful orders, rules, and regulations of the fire and health departments of the Lessor, and all ordinances, regulations and laws of the Lessor, County of Waupaca, State of Wisconsin, and the United States in relationship to said premises and the operation of an airport.

c. Lessee agrees to hold Lessor free and harmless from loss from each and every claim and demand of whatever nature, made on behalf of or by any person or persons, for any wrongful, careless or negligent omission on the part of Lessee, its agents, servants, and employees, and from all loss and damage by reason of such acts or omissions.

d. Lessee will be deemed in default upon:

i. Filing of a petition in bankruptcy.
ii. Commencement of a proceeding for appointment of a receiver.
iii. The making of an assignment for the benefit of creditors.
iv. A default in the performance of any covenant or condition of this agreement for a period of five (5) days after service of notice thereof by the Lessor.

In the event of such default, the Lessor may serve written notice that the Lessor elects to terminate this agreement upon a date specified not less than ten (10) days after serving such notice. This agreement shall expire on the date so specified as if that date had been fixed as the expiration of this agreement

15. Subordination Clause. This lease shall be subordinate to the provisions of any existing or future agreement between the Lessor and the United States, relative to the operation or maintenance of the airport, the execution of which has been or may be required as a condition precedent to the expenditure of federal funds for the development of the airport.

16. Non-Discrimination Clause. The Lessor, its agents and employees will not discriminate against any person or class of persons by reason of race, color, creed or national origin in providing any services or in the use of any of its facilities provided for the public, in any manner provided by Part 21, DOT Civil Rights Assurance. The Lessee further agrees to comply with such enforcement procedures as the United States might demand that the Lessor take in order to comply with the sponsor's assurances.

This agreement shall be binding upon the parties hereto and their respective successors, heirs and assigns.

IN WITNESS WHEREOF, the parties have hereunto set their hands and signatures the day and year first above written.

REABE AIRCRAFT IMPROVEMENT: (Lessee)	CITY OF CLINTONVILLE a municipal corporation (Lessor)
Sign: _____/Date:_____ Jeff Reabe Reabe Aircraft Improvement	Sign: _____/Date:_____ Jeannie Schley Clintonville Mayor

By: _____
Peggy L. Johnson
Clintonville City Clerk

Exhibit A Map

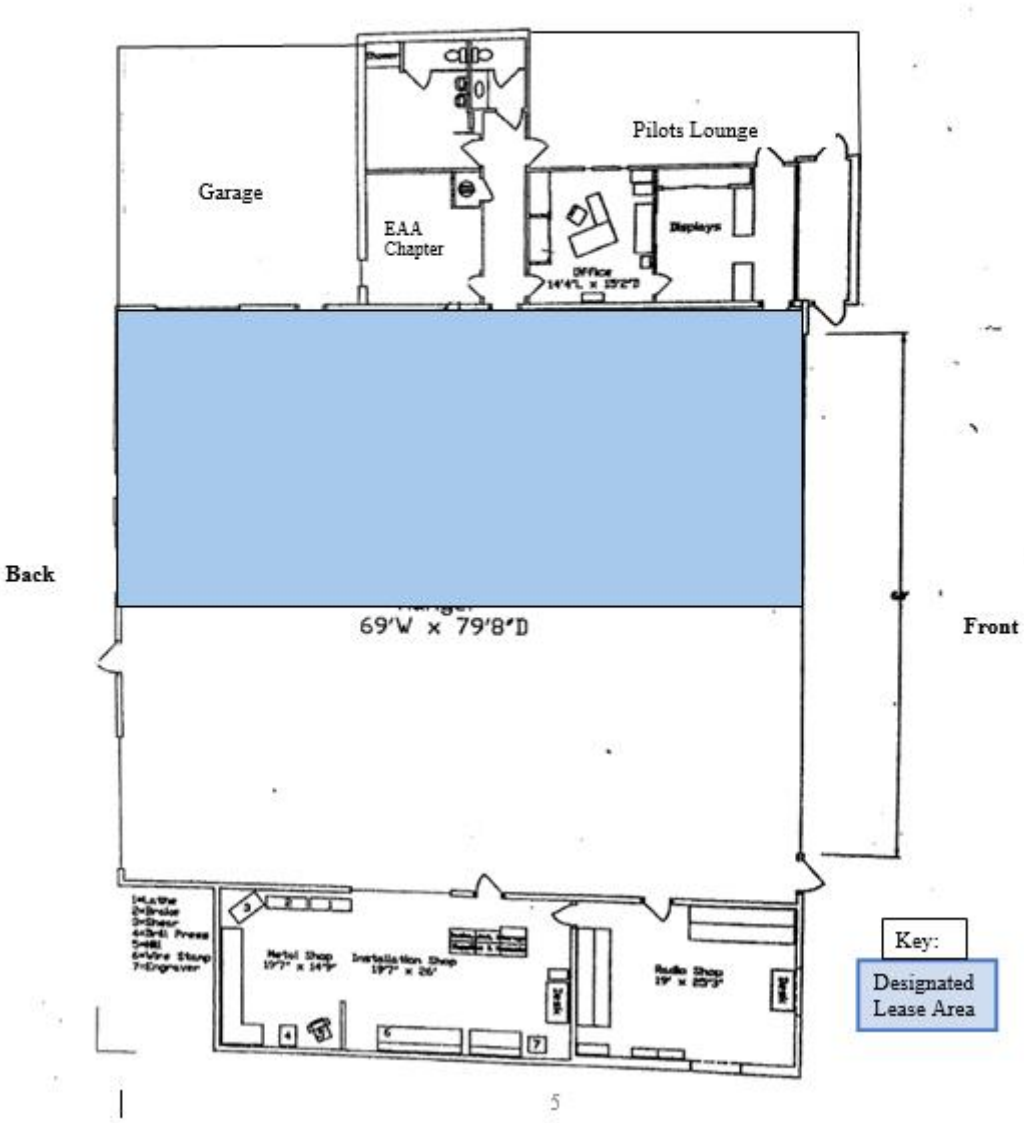

5

2026 – 2029 LEASE AGREEMENT
HANGAR #440

THIS 2026 - 2029 LEASE AGREEMENT, is made and entered into this ____ day of _____, effective _____, 20___, by and between the CITY OF CLINTONVILLE, State of Wisconsin, a municipal corporation, existing by and under the authority of the laws of the State of Wisconsin, hereinafter referred to as "Lessor", party of the first part and hereinafter referred to as the "Lessee", party of the second part.

WHEREAS, Lessor owns and operates an airport known as the Clintonville Municipal Airport and is desirous of leasing to Lessee certain premises hereinafter more fully described located on said airport, together with the right to use and enjoy individually and in common with others the facilities referred to; and

WHEREAS, for and in consideration of the rents, covenants and agreements herein contained, the Lessor does hereby lease, demise and let to the Lessee and the Lessee does hereby hire, take and lease from Lessor the following described premises upon the following terms and conditions:

1. Premises. The Lessor does hereby demise and let to the Lessee. The premises described as follows: Designated areas of the Municipal Hangar located at 440 7th Street and known as Hanger # 440. The designated areas are limited to the northwest half of the hangar bay, the northwest 'bench' corresponding office and storage space. See **Exhibit A Map** identifying the designated lease space. The non-designated area begins at the start of the southwest half of the hangar bay and extends throughout the remaining area of Hangar #440, which includes an office, bathroom facilities, and the pilots' lounge, and EAA Chapter 1710 office.

2. Term. The term hereof shall be for November 1, 2026 to December 31, 2029. The Lessor and Lessee shall meet in November prior to the end of a lease to negotiate the following lease agreement or vacation of tenant. The Lessee may terminate this lease without penalty upon providing a minimum of a 30-day written notice to the Lessor of such cancellation.

3. Rent. As rent for said premises Lessee shall pay to Lessor at its offices located at 50 Tenth Street, Clintonville, Wisconsin 54929, the sum of four hundred and 00/100 dollars per month as base rent. In addition to Base Rent, Tenant shall pay to Lessor Percentage Rent equal to four (4) percent (%) of Lessee's qualifying gross revenue. Percentage Rent shall apply only to qualifying revenue in excess of the $56,000 required to cover fixed-costs.

For purposes of this Lease, "Qualifying Gross Revenue" means only revenue attributable to labor performed by Lessee for aircraft maintenance, repairs, and inspections at the Clintonville Airport, including labor billed at hourly or flat rates, whether collected or accrued and whether paid in cash, credit, or other consideration. Qualifying Gross Revenue shall exclude all revenue attributable to parts, materials, consumables, shop supplies, freight, taxes, subcontracted services, warranty parts reimbursements, off-premise work, and any other non-labor charges, regardless of whether such items include a markup.

Lessee shall submit to Lessor a monthly revenue statement within 15 days after the end of each month, and an annual certified revenue report within 30 days after the end of each Lease Year. Percentage Rent, if owed, shall be paid concurrently with Lessee's delivery of the annual report. Lessor shall have reasonable audit rights, upon prior notice, to inspect Lessee's books and records related to Qualifying Gross Revenue not more than four (4) times per year.

REVCO shall provide the City of Clintonville's accountant access to REVCO's QuickBooks account for purposes of reviewing and verifying Qualifying Gross Revenue and the related Percentage Rent calculations.

Rent shall be payable on the 1st day of each month, effective November 1, 2026.

4. Repairs. Throughout the term of this lease, the Lessee shall take good care of the demised premises and appurtenances and suffer no waste or injury. The Lessee agrees to repair and/or replace in-kind any damage the Lessee causes to the structure, premises, fixtures and appurtenances as a result of the Lessee's actions or any party's action that the Lessee allows access to or use of these facilities and property. Such repairs and/or replacement in-kind shall be accomplished within 45 days of the damage occurring. The Lessee shall notify the Lessor of any damage that has occurred within 48 hours after the damage has occurred or was found by the Lessee. Lessee agrees to repair, at or before the end of the term, all injury done by the installation or removal of Lessee's property, so as to restore the demised premises to their original state; and at the end of the term quit and surrender the demised premises in as good order and condition as they were at the beginning of the term, reasonable wear and damages by the elements excepted.

5. Use of Premises. Lessee covenants that it will not use the premises for any purpose in violation of any law, municipal ordinance or regulation, and that on any breach of this agreement the Lessor may, at its option, terminate this Lease forthwith and re-enter and repossess the demised premises. Lessee further covenants to keep all grass mowed within ten (10) feet of the hangar. It is further agreed, in the event these conditions are not complied with, the City may enter upon said premises to remove such rubbish, junk and debris, or to clip the grass, and bill the expense thereof to the Lessee. Lessee shall pay such bill upon presentation.

6. Damage. The Lessor shall not be liable to the Lessee for any damage done or occasioned by or from plumbing, gas, water, steam or other pipes, or sewerage, or the bursting, leaking or running of any cistern, tank, washstand, water closet or waste pipe in, above, upon or about said building or premises, nor from operation or maintenance of the heating plant or boiler, nor for damage occasioned by water, snow or ice being upon or coming through the roof, sky-light, trap door or otherwise.

7. Inspection by Lessor. The Lessee agrees and covenants that the Lessor or its agent, at all reasonable times and during all reasonable hours, shall have free access to said demised premises, and throughout any building or structure that may at anytime be thereon, or any part thereof, for the purpose of examining or inspecting the conditions of the same, or of exercising any right or power reserved to the Lessor under the terms and provisions of this lease; provided, however, that the Lessor shall give Lessee 24 hours' notice of its intention to inspect as aforesaid.

8. Notices. For the purpose of this lease, notices shall be given by certified mail and shall be delivered to the parties at the following addresses:

Lessor: City of Clintonville
City Hall
50 Tenth Street
Clintonville, WI 54929

Lessee: Brett Revling
REVCO Aviation Services
[Address]
[Email]

Or at such other place as the parties hereto shall from time to time designate in writing.

9. Payment for Work done by or for Lessee. Lessee agrees that it will promptly pay for any work done by or for Lessee in or about the premises and will not permit or suffer any mechanic's lien to attach to the premises by reason of such work and shall promptly cause any claim for such lien to be released, or to secure the Lessor to the satisfaction in the event the Lessee desires to contest any such claim.

10. Installation by Lessee. The Lessee may install removable partitions, counters, racks, shelving, machinery and equipment incidental to Lessee's trade and business, and other fixtures or equipment, all of which may be removed by the Lessee upon expiration of this lease; provided that the Lessee shall leave said removal, ordinary wear and tear excepted. The Lessee shall make no structural changes, additions, or improvements on or in the building or premises without the written consent of the Lessor.

11. Casualty Loss: In case the premises hereby leased shall be partially damaged by fire or other cause at anytime during the said term, they shall be repaired by the Lessor or any insurance company on its behalf, with all reasonable dispatch, and a proportionate reduction of rent shall be allowed the Lessee for the time occupied in such repairs excepting:

(a) If the Lessee can use and occupy the demised premises without substantial inconvenience, there shall be no reduction of rent; and

(b) If said repairs are delayed because of the failure of the said Lessee to adjust its own insurance, no reduction shall be made beyond a reasonable time allowed for such adjustment.

In case the damage by fire or other cause shall account substantially to the destruction of the premises hereby leased, then and in that event this lease shall become null and void and the responsibilities of the Lessor and Lessee, with reference to the unexpired term, shall cease.

12. Subletting or Assignment. The Lessee shall neither sublet all or any part of the demised premises nor assign this lease without the prior written consent of the Lessor.

13. Miscellaneous.

(a) Lessee covenants and agrees that it is an independent contractor and no relationship of employer-employee exists between Lessor and Lessee.

(b) Lessee agrees to obey all lawful orders, rules, and regulations of the fire and health departments of the Lessor, and all ordinances, regulations and laws of the Lessor, County of Waupaca, State of Wisconsin, and the United States in relationship to said premises and the operation of an airport.

(c) Lessee agrees to hold Lessor free and harmless from loss from each and every claim and demand of whatever nature, made on behalf of or by any person or persons, for any

wrongful, careless or negligent omission on the part of Lessee, its agents, servants, and employees, and from all loss and damage by reason of such acts or omissions.

(d) Lessee will be deemed in default upon:

i. Filing of a petition for bankruptcy.
ii. Commencement of a proceeding for appointment of a receiver.
iii. The making of an assignment for the benefit of creditors.
iv. A default in the performance of any covenant or condition of this agreement for a period of five (5) days after service of notice thereof by the Lessor.

In the event of such default, the Lessor may serve written notice that the Lessor elects to terminate this agreement upon a date specified not less than ten (10) days after serving such notice. This agreement shall expire on the date so specified as if that date had been fixed as the expiration of this agreement

14. Subordination Clause. This lease shall be subordinate to the provisions of any existing or future agreement between the Lessor and the United States, relative to the operation or maintenance of the airport, the execution of which has been or may be required as a condition precedent to the expenditure of federal funds for the development of the airport.

15. Non-Discrimination Clause. The Lessor, its agents and employees will not discriminate against any person or class of persons by reason of race, color, creed or national origin in providing any services or in the use of any of its facilities provided for the public, in any manner provided by Part 21, DOT Civil Rights Assurance. The Lessee further agrees to comply with such enforcement procedures as the United States might demand that the Lessor take in order to comply with the sponsor's assurances.

This agreement shall be binding upon the parties hereto and their respective successors, heirs and assigns.

Signed this _____ day of _____, 2026.

IN WITNESS WHEREOF, the parties have hereunto set their hands and signatures the day and year first above written.

REVCO AIRCRAFT SERVICES
(Lessee)

By: _____
Brett Revling
Owner

CITY OF CLINTONVILLE
a municipal corporation (Lessor)

By: _____
Jeannie Schley
Mayor

By: _____
Peggy L. Johnson
City Clerk

Exhibit A Map

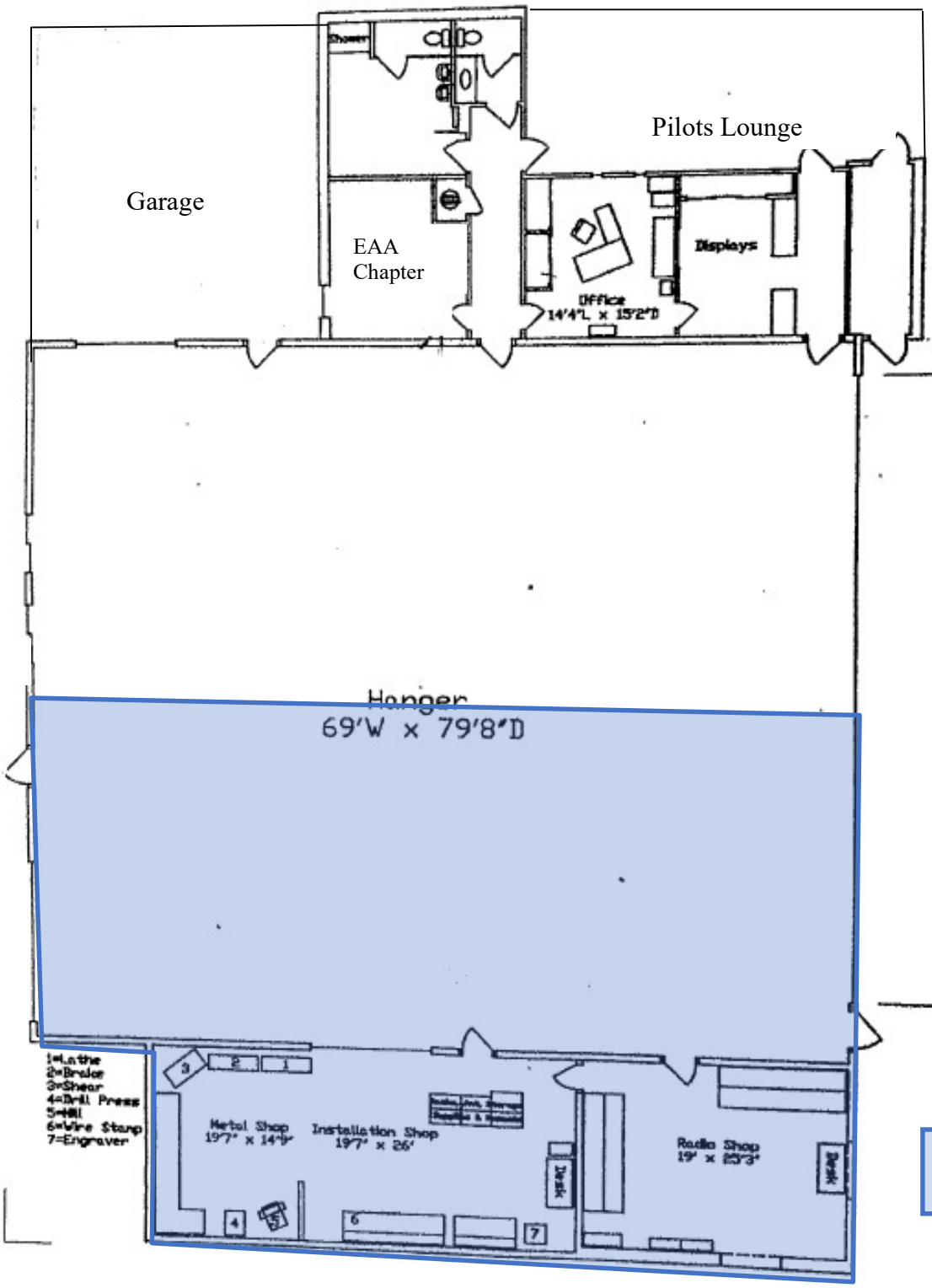

Back

Front

Key:

Designated Lease Area

CONTRACT AMENDMENT
City of Clintonville Maintenance Assessment Contract — 2027 Extension

This Amendment is entered into by and between Servi Group, Inc., hereinafter referred to as the "Assessor," and the City of Clintonville, Waupaca County, Wisconsin, hereinafter referred to as the "Municipality."

WHEREAS:

1. The parties entered into an Annual Assessment Maintenance Agreement for the term October 1, 2023 through December 31, 2026.

2. The Municipality and Assessor desire to extend the existing agreement through 2027 with the same scope of services and annual compensation as 2026.

NOW, THEREFORE, the parties hereby agree to amend the contract as follows:

ARTICLE I – TERM OF AGREEMENT (AMENDMENT)

The term of the Maintenance Assessment Contract shall be extended for one additional year, commencing January 1, 2027 and ending December 31, 2027.

ARTICLE II – COMPENSATION (AMENDMENT)

For the performance of services required under this Amendment, the Municipality shall pay the Assessor the same annual compensation as provided for 2026.

Total Yearly Compensation for 2027 – $25,100

The billing, payment, and reimbursable expense provisions of the existing agreement shall continue to apply.

ARTICLE III – GENERAL AGREEMENTS (AMENDMENT)

All other terms, provisions, and conditions of the original Maintenance Assessment Contract shall remain in full force and effect. This Amendment shall be attached to and become part of the original contract between the parties.

IN WITNESS WHEREOF, the parties have executed this Amendment on _____, 20____.

SERVI GROUP, INC.

By: _____
Name: Adam M. Servi
Title: President / Owner
P.O. Box 80, New Franken, WI 54229
Phone: (920) 544-5398

CITY OF CLINTONVILLE

By: _____
Name: _____
Title: _____
Attest: _____
Clerk

Memo

To: Finance and Personnel Committee

From:

Meeting Date: October 12, 2026

Subject: Library Roof Repair

Memo:

Attachments:

1. 10.13.2026 Library Roof Repair

Memo

To:	Finance and Personnel Committee
From:	Craig Moser, City Administrator
Meeting Date:	October 12, 2026
Subject:	Library Roof Repair

Background

Library Director Hein inquired about any financial assistance the City might provide for an unplanned, unbudgeted roof repair expense of roughly $10,000 incurred this summer. Director Hein indicates that typically such an expense has been covered entirely by Library Fund Balance, which has diminished Library Fund Balance down to roughly $87,000.

The City budgeted $10,000 in a contingency fund in 2026, with a current balance of roughly $7,000.

Recommendation

Given the partnership between the City and Library, staff recommends consideration of a 50/50 cost share approach with the Library at the end of the year should sufficient funds remain available in the City contingency fund at that time.

Memo

To: Finance and Personnel Committee

From:

Meeting Date: October 12, 2026

Subject: Potential Housing Incentive Program

Memo:

Attachments:

None

Memo

To: Finance and Personnel Committee

From:

Meeting Date: October 12, 2026

Subject: Personnel Report

Memo:

Attachments:

1. 10.12.2026 Personnel Report

Memo

To: Finance and Personnel Committee

From: Craig Moser, City Administrator

Meeting Date: October 12, 2026

Subject: Personnel Report

Fire Medic Recruitment Update

- Posted on City and Fire Department website
- Posted on City and Fire Department Facebook page
- Posted on WI League of Municipalities Job Board
- Posted on Indeed
- Posted on Professional Ambulance Association of WI Job Board
- Posted on WI EMS Association Job Board
- Submitted to WI Dept. of Workforce Development for posting
- 13 applicants, 3 of whom are Paramedics
- Interviews tentatively scheduled late October

Police Department

- Officer Michelle Kamba started with the Clintonville PD on 10/7, returning to where she began her 20-year career in Law Enforcement. Her familiarity with the community and extensive experience will be beneficial to the Department.

Public Works

- The vacant Operator position in the Street Division has been filled with a start date the week of October 19th.

Memo

To: Finance and Personnel Committee

From:

Meeting Date: October 12, 2026

Subject: Preliminary 2027 Budget and Capital Improvement Plan (CIP)

Memo:

Attachments:

1. 2027 Preliminary Budget and CIP

Memo

To:	Finance and Personnel Committee
From:	Craig Moser, City Admnistrator
Meeting Date:	October 12, 2026
Subject:	Preliminary 2027 Budget and Capital Improvement Plan (CIP)

A high-level summary of the Preliminary 2027 Budget and Capital Improvement Plan (CIP) will be provided to Committee Members for review prior to the Special Budget Finance and Personnel Committee meeting scheduled for October 26th.

Memo

To: Finance and Personnel Committee

From: Justin Mc Auly, DPW Director

Meeting Date: October 12, 2026

Subject: Discussion/Possible Action Regarding Line Painting Contract

Memo:

Attachments:

1. Memo - Line Painting Contract
2. Clintonville - Memorial Circle and Bucholtz Park
3. Clintonville - Memorial Circle and Bucholtz Park (Century)

City of Clintonville

Memo

To: Finance/Common Council

From: Justin Mc Auly, Director of Public Works

Date: 10.7.2026

Re: Discussion/Possible Action Regarding Line Painting Contract

---

The Department of Public Works would like to get both the parking lot in Bucholtz Park and Memorial Circle lines painted yet this year.

We pulled the painting from both projects because it would have put both projects over budget even more. Joining the two on a separate contract will save the City the extra mobilization cost.

Bids:

1. Crowley Construction Corporation – Wauwatosa, WI - $7,995.00
2. Century Traffic – Pewaukee, WI (Manawa Location) - $14,000.00

Possible recommendation:

I recommend hiring Crowley Construction Corporation to paint lines at both Bucholtz Parking Lot & Memorial Circle, not to exceed $7,995, coming from Capital.

If you have any questions, please contact me at (715) 823-2005 or e-mail at jmcauly@clintonvillewi.gov.

Respectfully,



Justin Mc Auly
Director of Public Works
City of Clintonville

Date: May 11, 2026

Bid Date:

Project No./Name: Clintonville
Memorial Circle and Bucholtz Park
Pavement Marking

Crowley Construction Corporation
An Equal Opportunity Employer
DBE-WBE-SBE Certified
DBE Certified in WI, MN, IL, IA & SD

1353 North 68th Street
Wauwatosa, WI 53213

Phone: 414-257-2141
Fax: 414-647-1464

Line #	Qty		Item	Unit Bid
			Buchholtz Park	
	88	EA	Stalls Epoxy (white)	
	2	EA	ADA Symbols Epoxy (white)	
	4	EA	Hatched Areas Epoxy (white)	
			Memorial Circle	
	12	EA	New Epoxy Parallel Parking Spaces	
			One Mobilization included Additional Mobilizations will be billed at $3,495	
	1	LS	Lump sum for epoxy pavement marking and removal	$7,995.00

PERMANENT MARKINGS WILL NOT HAVE ANY WARRANTY IF DONE OUTSIDE OF MANUFACTURER'S SPECIFICATIONS
**Quote is good for 60 Days. If the 60 days have expired and we have not received a subcontract or notice that
Crowley Construction is not responsible for cleanup of other contractors operations.
All material quoted meets the requirements for Wisconsin Department of Transportation for EPOXY.
- Prices DO NOT include traffic Control -

Total Bid Amount: $ 7,995.00

Justin Crowley-Johnson, Vice President
WBE-DBE-SBE Certified

CENTURY TRAFFIC

P.O. Box 727 | Pewaukee, WI 53072-0727 | (262)691-3236

Project Name:	Clintonville Parking Lot	**Bid Number:**	
Project Location:	Clintonville, Waupaca County, WI	**Bid Date:**	9/24/2026

Line #	Item Description	Estimated Quantity	Unit	Unit Price	Total Price
1	Pavement Markings, Epoxy	1.00	LS	$14,000.00	$14,000.00

Total Bid Price: $14,000.00

Notes:

- **Must include this quote as part of the contract.**
- **Century Traffic is Signatory to the IUOE Local 139 for Pavement Marking Operations**
- This proposal remains valid for 30 days. If the proposal is not accepted and returned within 30 days Century Traffic LLC reserves the right to modify this proposal.
- Quote doesn't include any removal.
- Quote based off email sent on 9/23.

ACCEPTED:

The above prices, specifications and conditions are satisfactory and hereby accepted.

Buyer: _____

Signature: _____

Date of Acceptance: _____

CONFIRMED:

Century Traffic, LLC

Jace Gilbertson

Authorized Signature:

Estimator: Jace Gilbertson
715-505-4844
jacegilbertson@centurytraffic.com

Memo

To: Finance and Personnel Committee

From: Justin Mc Auly, DPW Director

Meeting Date: October 12, 2026

Subject: Discussion/Possible Action Regarding Athletic Field Fencing Project

Memo:

Attachments:

1. Memo - Athletic Field Fencing Project
2. Athletic Field Fencing Project

City of Clintonville

Memo

To: Finance/Common Council

From: Justin Mc Auly, Director of Public Works

Date: 10.7.2026

Re: Discussion/Possible Action Regarding Athletic Field Fencing Project

---

The fencing at the Walter A. Olen Athletic Field is in rough shape in the Northwest corner of the facility. The City would like to replace the existing fencing with new chain link and replace all but (2) posts. There is also a gate that is in disrepair that isn't used. We plan on removing the gate and putting chain link through that area.

At the moment the project isn't budgeted in 2026, but the Department of Public Works has TBD funds in Capital and this project would be a great project to finish in 2026 with some of those funds.

The City will save $1,495 by doing the demo in house. The demo cost is not figured into the $4,675.

American Fence Company – Plover & Neenah, WI - $4,675.00

Possible recommendation:

I recommend hiring American Fence Company to replace the fencing in the Northwest corner of the W.A. Olen Athletic Field facility for $4,675 coming from Capital.

If you have any questions, please contact me at (715) 823-2005 or e-mail at jmcauly@clintonvillewi.gov.

Respectfully,



Justin Mc Auly
Director of Public Works
City of Clintonville

American Fence Company

3210 Mecca Drive
Plover, WI 54467
800-472-0505 or 715-341-4411

910 W Plummer Ct
Neenah, WI 54956
800-310-0600 or 920-886-6676

www.americanfencewi.com

Quote 00284812

Date: 10/6/2026
Contact:: Justin Mcauly
Business Telephone: 823-7660
2nd Telephone:

Proposal To:

City of Clintonville
50 Tenth Street
Clintonville, WI 54939

Job Site:

Don Jirschele Stadium
Memorial Circle
Clintonville, WI

Ryan 250-5320

Description	Price
Furnish and install 131' of 7' high heavy industrial chain link fence (re-use (2) existing end posts). All framework is made in USA heavy industrial 40Wt 3" corner post set in concrete, 2 1/2" line posts driven 48" deep @ 10' spacing. Fence has 1 5/8" top rail, 7ga bottom tension wire and 9ga galvanized fence wire. ASSUMES City of Clintonville has demo 'd existing fence. ADD +$1,495.00 to demo 131' of existing 7' chain link fence	$4,675.00

Terms:
Net 10 days.

THANK YOU!
Please sign 2 copies and return one.

Subtotal:	$4,675.00
Freight:	$0.00
Sales Tax:	$0.00
Total Amount:	$4,675.00

Project Manager Jeff Freck

Proposal Accepted by: _____

Prices are valid through: 10/29/26

Customer Purchase Order#: _____
(for business use)

1) Customer hereby assumes full responsibility for the location of the line upon which said fence materials are to be installed.
2) Private lines not marked by Diggers Hotline such as electric, LP gas, sprinklers, underground cables or pipes are the customers responsibility to locate.
3) Customer agrees to remove existing old fences and shrubs and dispose of spoils unless otherwise specified.
4) Customer is responsible for building permits if necessary.
5) More or less material other than the amount contracted for will be debited or credited at current rates.
6) American Fence Company reserves the right to make additional charges to the customer in the event of unusual ground conditions (such as rock formation) that impede the installation. Additional charges shall be based on actual additional labor required to complete installation under the circumstances.
7) All accounts are payable in full within ten (10) days of the date of the invoice. 1.5% per month (18% per year) late fee will be assessed on past due accounts.
8) Customer agrees to pay all costs of collection incurred by American Fence Company before and after judgment, including reasonable attorney fees. All parties agree that if collection action becomes necessary, all collections will be filed in Winnebago County, Wisconsin.
9) As required by the Wisconsin construction lien law, builder hereby notifies owner that persons or companies furnishing labor or materials for the construction on owner's land may have lien rights on owner's land and building if not paid. Those entitled to lien rights, in addition to the above signed builder, are those who contract directly with the owner or those who give the owner notice within 60 days after they first furnish labor or materials for the construction. Accordingly, owner probably will receive notices from those who furnish labor or materials for the construction, and should give a copy of each notice received to the mortgage lender, if any. Builder agrees to cooperate with the owner and the owner's lender, if any, to see that all potential lien claimants are duly paid.
10) Quotes are valid for 30 days unless otherwise specified.
11) Owner consents to American Fence Company personnel taking photos of work in-progress and finished work for marketing purposes.
12) Credit card payments exceeding $2,500.00 will be subjected to a 2% convenience fee per sale. Credit card fees are non-refundable.

NON-AERONAUTICAL LEASE
Clintonville Area Waste Service (CAWS) Site

This agreement, made and entered into on the date indicated below by and between City of Clintonville, hereinafter called the Lessor, and Clintonville Area Waste Service (CAWS), hereinafter called the Lessee.

WHEREAS, the Lessor owns and operates an airport known as Clintonville Municipal Airport and Lessee is desirous of leasing from the Lessor a certain parcel of land on the airport, hereinafter more fully described, for the purpose of a garbage and recycling facility;

NOW, THEREFORE, for and in consideration of the rental charges, covenants, and agreements herein contained, the Lessee does hereby lease from the Lessor the following premises, rights, and easements on and to the airport upon the following terms and conditions.

1. **Premises Description**: The property is roughly 2.01 acres West of the Airport runways located outside the Airport perimeter fencing.

2. **Term:** The term of this lease shall be for a period of sixty-six (64) calendar months commencing on August 1, 2026 and terminating on December 31, 2031.

3. **Rent:** The Lessee agrees to pay to the Lessor for the use of the premises, rights, and easements herein described, a yearly rental rate of $201.00 payable by January 1. Payments shall be due without further notice from the Lessor.

   Rent is based off of the going rate per acre at the Airport at a 50% reduction due to the Lessee maintaining vegetation on the property. The maintenance keeps vegetation at a minimum and qualifies for a reduced rate. Current land lease value is $200/acre for agriculture surrounding the property. Fair market lease would be $402/year with a 50% reduction due to maintenance ($201/year).

   Annual lease payments shall be made payable to the City of Clintonville and shall be sent to City of Clintonville, 50 10th Street, Clintonville, WI 54929.

Year	Per Acre	Total	Each Municipality
2027	$200.00	$201.00	$67.00
2028	$200.00	$201.00	$67.00
2029	$200.00	$201.00	$67.00
2030	$200.00	$201.00	$67.00
2031	$200.00	$201.00	$67.00

4. **Use of the Premises:** Lessee shall have the right to use the premises solely for garbage and recycling purposes and hereby agrees to the following:

DRAFT

a. Any construction on or improvement of the leased area must be approved by Lessor in writing prior to such use.

b. Lessee shall not burn any product of the land without the expressed permission of the Lessor.

c. Lessee shall not create or contribute to standing water.

d. Lessee is responsible for the removal of all garbage from the premises.

e. Lessee is responsible for any and all utilities bills at this property.

5. **Access:** Lessee shall have the right of ingress to and egress from the demised premises via the following access routes:

   a. Off E. Madison Street

   Lessee agrees to repair any damage to Lessor's property caused by Lessee's use of said access routes.

6. **Approach Protection:** Lessor reserves the right to take any action it considers necessary to protect the aerial approaches of the airport against obstruction, together with the right to prevent Lessee from erecting, or permitting to be erected, any building or other structure on the airport, which, in the opinion of Lessor, would limit the usefulness of the airport, or constitute a hazard to aircraft.

7. **Land Reduction:** The Lessor reserves the right to remove from this lease all or any part of the above-described premises in the event the Lessor determines that said premises are needed for aeronautical purposes. The Lessor shall give the Lessee written notice of such removal at least thirty (30) days prior to the effective date of the removal. In the event of such removal, this lease shall continue on the unaffected land, but the rent will be proportionately adjusted.

8. **Right to Inspect:** Lessor reserves the right to enter upon the premises at any reasonable time for the purpose of making any inspection it may deem expedient to the proper enforcement of any of the covenants or conditions of this agreement, or to the operation of the airport.

9. **Signs:** No signs or advertising matter may be erected on the leased premises without the prior written consent of the Lessor.

10. **Mineral and Gravel Rights:** Title to all minerals or gravel on said premises shall remain in the Lessor and this lease does not convey any rights thereto.

11. **Hunting Rights:** All hunting rights and privileges are reserved to the Lessor and this lease does not convey any rights thereto.

12. **Insurance:** The Lessee shall provide and carry general liability insurance providing coverage with the limits of liability of not less than $50,000 for bodily injuries or property damage as a result of any one accident. Said policy shall name the Lessor as an additional insured, and a copy of such policy, or certificate thereof, shall be provided to the Lessor. Furthermore, said policy shall contain a clause preventing termination or cancellation except upon thirty (30) days written notice to the Lessor.

13. **Hold Harmless:** The Lessor shall not be liable to the Lessee for, and Lessee shall hold the Lessor harmless from, any and all claims, damages or losses caused by the acts or omissions of the Lessee, its family, guests, invitees, employees, agents, representatives or servants, relating to or arising out of

DRAFT

Lessee's use and enjoyment of the premises or the rights and privileges granted by this lease. The Lessor shall not be liable for any loss or damage, not caused by negligent acts or omissions of the Lessor, which Lessee may sustain from:

a. Theft or burglary in or about the premises;

b. Delay or interruption in any utility service from any cause whatsoever;

c. Fire, water, rain, frost, snow, gas, odors or fumes from any source whatsoever; or

d. Any injury to any person or damage to any property.

14. **Liens and Encumbrances:** The Lessee shall neither create, nor cause or permit to be created, any lien, encumbrance, security interest or other charge, including liens for work, labor or materials furnished, or alleged to have been furnished, on the leased premises.

15. **Default and Termination:**

a. **Default Defined:** Lessee shall be deemed in default upon

i. Failure to pay rent or any other properly-imposed fee within 30 days after due date.

ii. The filing of any petition under the Federal Bankruptcy Act or any amendment thereto, including a petition for reorganization.

iii. The commencement of any proceeding for dissolution or for the appointment of a receiver.

iv. The making of an assignment for the benefit of creditors.

v. Violation of any of the other terms or conditions of this lease after written notice to cease and/or correct such violation has been served upon the Lessee by the Lessor, and after the Lessee has failed to correct such violation within thirty (30) days of service of such notice (or such later deadline as may be established in the Notice by the Lessee). Mailing notice by U.S. Mail, Certified Mail, shall constitute "service" of notice. In the case of a violation which cannot with due diligence be cured within a period established, the Lessee may apply to the Lessor for an extension of time within which to cure said violation.

b. **Effect of Default:** Default by the Lessee shall authorize the Lessor, at its sole option, to declare this lease void, to cancel the same, and to re-enter and take possession of the premises.

c. **Remedies:** Except otherwise provided herein, no right or remedy herein conferred shall be considered exclusive of any other right or remedy and each and every right and remedy shall be cumulative and in addition to any other right and remedy given hereunder, or now or hereafter existing at law or in equity or by statute.

d. **Restoration of Property:** Upon termination of this lease, the Lessee shall remove all of its buildings, equipment, and property, and restore the leased premises to its original vacant condition, unless the Lessor agrees, in writing, to accept all or any part of the property

DRAFT

which the Lessee wishes to abandon.

e. **Non-waiver:** Any intentional or unintentional waiver by the Lessor of any violation of this Contract by the Lessee shall not be construed or interpreted to be a waiver of any other prior, subsequent or contemporaneous violation.

16. **Lease Transfer:** The Lessee may not assign or transfer this agreement or any interest contained herein, nor sublet any part of the premises without the consent of the Lessor.

17. **Subordination Clause:** This lease shall be subordinate to the provisions of any existing or future agreement between the Lessor and the United States or the State of Wisconsin relative to the operation or maintenance of the airport, the execution of which has been or may be required as a condition precedent to the expenditure of federal or state funds for the development of the airport. Furthermore, this lease may be amended to include provisions required by those agreements with the United States or the State of Wisconsin.

18. **National Emergency:** During time of War or other State or National emergency, the Lessor shall have the right to suspend this Contract, and to turn over operation and control of the Airport to the State of Wisconsin and/or the United States Government During any period when the airport shall be closed by any lawful authority, thereby restricting the use of the airport in such a manner as to interfere with the use of same by Lessee, the rent shall abate, and the period of such closure shall be added to the term of this lease so as to extend and postpone the expiration thereof.

19. **Nondiscrimination:** The Lessee, as a part of the consideration hereof, does hereby covenant and agree as a covenant running with the land that:

    a. No person on the grounds of race, color, or national origin shall be excluded from participation in, denied the benefits of, or be otherwise subjected to discrimination in the use of the Subject Property or Lessee's Improvements.

    b. In the construction of any improvements on, over, or under such land and the furnishing of services thereon, no person on the grounds of race, color, or national origin shall be excluded from participation in, denied the benefits of, or otherwise be subjected to discrimination,

    c. The Lessee shall use the Subject Property and Lessee's Improvements in compliance with all other requirements imposed by or pursuant to Title 49, Code of Federal Regulations, Department of Transportation, Subtitle A, Office of the Secretary, Part 21, Nondiscrimination, in Federally-assisted programs of the Department of Transportation-Effectuation of Title VI of the Civil Rights Act of 1964, and as said Regulations may be amended.

20. **Severability:** This lease shall be construed under the laws of the State of Wisconsin. Any covenant, condition, or provisions herein contained that is held to be invalid by any court of competent jurisdiction shall be considered deleted from this lease, but such deletion shall in no way affect any other covenant, condition, or provision herein contained so land as such deletion does not materially prejudice Lessor or Lessee in their respective rights and obligations contain in the valid remaining covenants, conditions and provisions of the lease, and when such occurs, only such other covenants, conditions or provisions shall be deleted as are incapable of enforcement.

DRAFT

Dated this _____ day of _____, 2026

LESSEE

_____
Town of Larrabee Chairman

_____
Town of Matteson Chairman

_____
City of Clintonville

LESSOR

_____
Jeannie Schley, Mayor

_____
Peggy L. Johnson, City Clerk



City of Clintonville

Memo

To: Finance/Common Council

From: Justin Mc Auly, Director of Public Works

Date: 10/7/2026

Re: Purchase of FLX Shade 18'x18'x18' in Ground Mounted Structure

---

There has been a heavy interest in installing a shade structure at the top of the hill where the Zoom Flumes are installed. This is to protect staff from the sun. We have purchased a few different styles of umbrellas over the last couple years and each one has failed to last the summer. Investing in a commercial grade shade structure was an idea that was brought up in conversation. Now the FLX Shade Structure is sold by the same company that sold the City inflatables and was recommended by the company as a great solution to our issue at hand.

I would recommend that we move forward with purchasing a FLX Shade 18'x18'x18' in Ground Mounted Structure from Commercial Recreation Specialist not to exceed $7,248.84. The structure will be installed in house. Funding will come from Capital. Commercial Recreation Specialists is the company that owns and operates the FLX Shade in Verona, WI. I am unable to get a second quote since CRS owns and operates the company.

1. Commercial Recreation Specialist – Verona, WI = $7,248.84 (not to exceed)

If you have any questions, please contact me at (715) 823-7660 or e-mail at jmcauly@clintonvillewi.gov.

Respectfully,



Justin Mc Auly
Director of Public Works
City of Clintonville

COMMERCIAL RECREATION SPECIALISTS

Please note, our address has changed:

Commercial Recreation Specialists
807 Liberty Dr Suite 101
Verona WI 53593

Phone: 877-896-8442
Fax: 608-848-8782

Today's Date:	Sep 29, 2026
Rep Name:	Mike Lambe
Business Type:	Municipal / Govt
Ideal Delivery Date Range:	
Required By Date:	
Head Office:	

Bill To:
Justin McAuly
City of Clintonville
50 10th Street
Clintonville, WI, 54929
USA

Ship To:
Justin McAuly
City of Clintonville
31 E Morning Glory Drive
Clintonville, WI, 54929
USA

Phone : 715-823-7600
Fax : 715-823-1352
Email : jmcauly@clintonvillewi.gov
Tax ID # :
Tax Exempt# :
PO # :

Qty	Item #	Name	Price	Total
1.00		Flx Shade 18'x18'x18' In Ground Mount	$5,750.77	$5,750.77

NOTES:

Product Subtotal	$5,750.77
Pro Rewards	$0.00
Shipping & Handling	$1,498.07
Lift Gate Needed?	No
Subtotal	$7,248.84
Taxes	$0.00
Credit Applied	$0.00
TOTAL	$7,248.84

Signature_____

Printed Name & Title_____

Note: This quote is valid for 30 days. Please review the above information carefully. It defines your order as we understand it. If satisfactory, please sign and date above, and then email the quote to your CRS representative for further instruction and payment information. We will begin processing your order upon receipt of both your payment and approval signature, per the terms indicated on your quote above. Additional surcharges may apply depending on final delivery address, actual delivery requirements and payment method. Lift gates and/or box trucks are available for an additional fee, but must be requested. Remote locations may be subject to an additional access fee. International shipping charges do not include duties, taxes, customs or brokerage fees; these are the sole responsibility of the customer. We have included estimated state and local sales taxes and fees in this quote, if applicable, based on the limited information we have at this time. The actual amount due will be added to our final invoice when known or removed if it is determined this transaction is exempt from these taxes.

COMMERCIAL **RECREATION** SPECIALISTS

FLX SHADE
Easy Aid To Shade



FLX Shade™

EASY SHADE FOR ANY FUN-FILLED SPACE

Easy To Install	Mount On Concrete, Asphalt & Grass	Withstands 90 mph Winds	Cost-Effective

CRS Standard Sizes

SQUARE

1

10’ x 10’

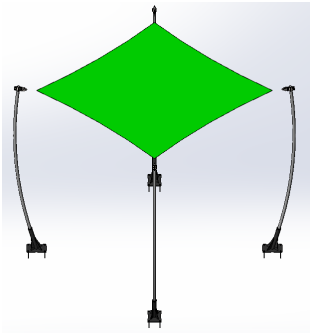

2

20’ x 20’

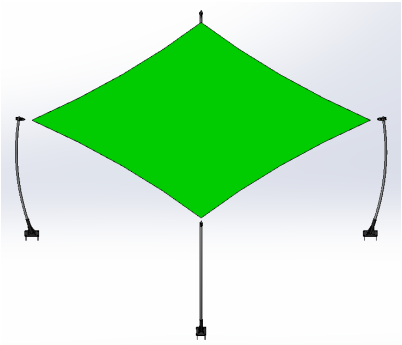

RECTANGLE

3

10’ x 20’

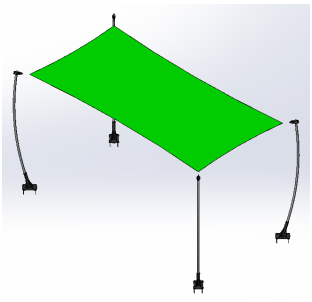

4

20’ x 27’

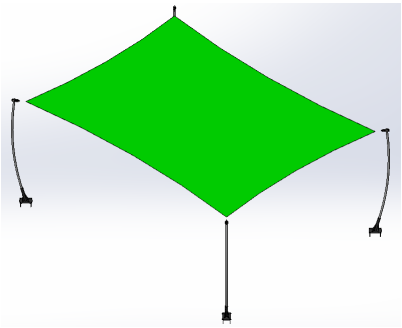

5

10’ x 40’

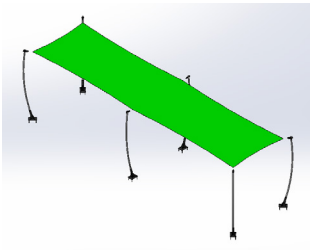

6

20’ x 40’

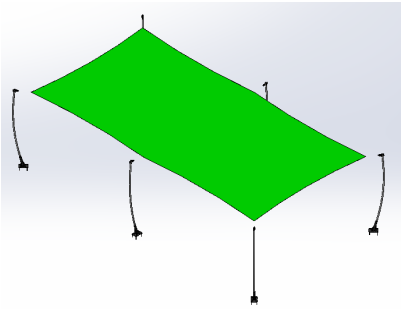

TRIANGLE

7

18’ x 18’ x 18’

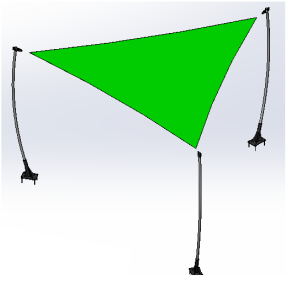

8

27’ x 27’ x 27’

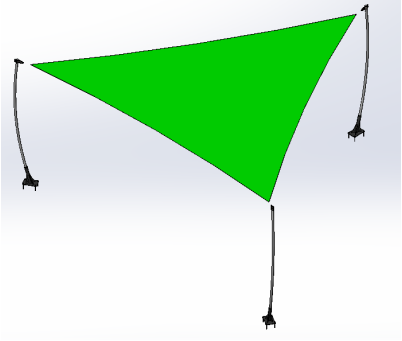

Mounting Options

A Angled Above-Ground Mount

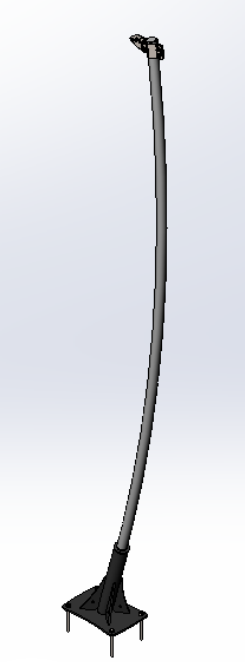

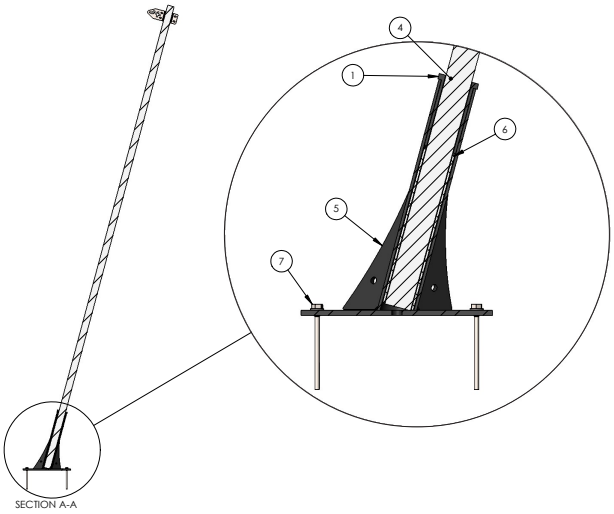





B Below-Ground Mount

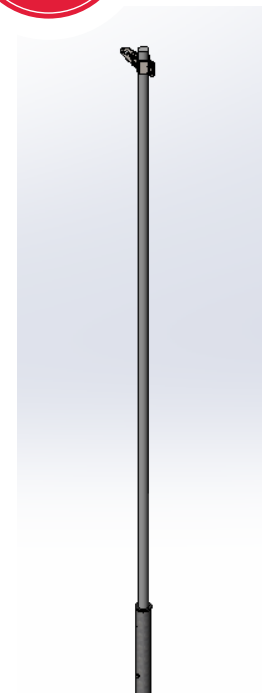

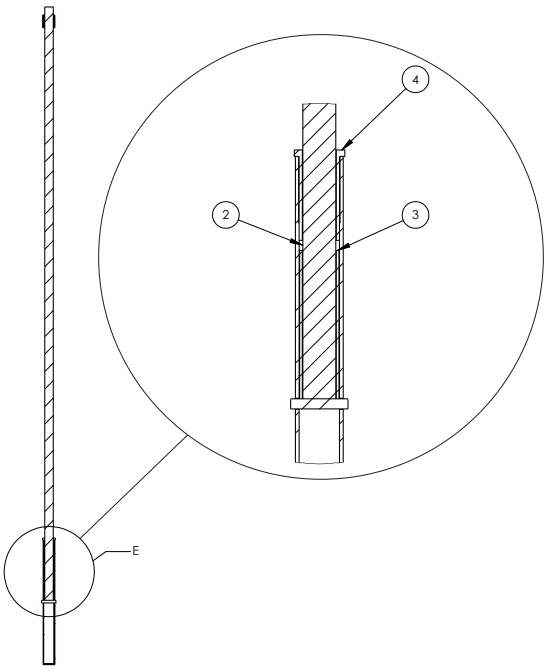

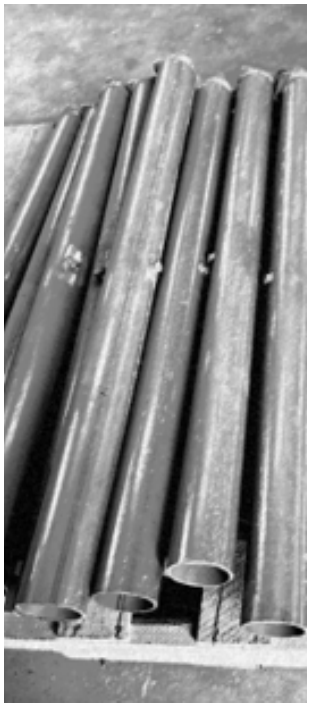



Product Prices

	Size	Shape	A Above-Ground Mount	B Below-Ground Mount
1	*10’ x 10’*	*Square*	*$5,538*	*$5,144*
2	*20’ x 20’*	*Square*	*$7,538*	*$7,144*
3	*10’ x 20’*	*Rectangle*	*$6,538*	*$6,144*
4	*20’ x 27’*	*Rectangle*	*$8,238*	*$7,844*
5	*10’ x 40’*	*Rectangle*	*$10,907*	*$10,316*
6	*20’ x 40’*	*Rectangle*	*$11,907*	*$11,316*
7	*18’ x 18’ x 18’*	*Triangle*	*$5,353*	*$5,058*
8	*27’ x 27’ x 27’*	*Triangle*	*$6,703*	*$6,408*

Custom sizes also available. Call for quote.

Prices subject to change. Freight, taxes and installation not included.

COMMERCIAL **RECREATION** SPECIALISTS

807 Liberty Drive, Suite 101, Verona, WI 53593

877-896-8442 | **crs4rec.com**

Memo

To: Finance and Personnel Committee

From:

Meeting Date: October 12, 2026

Subject: 2025 Audit Update

Memo:

Attachments:

1. 10.12.2026 2025 Audit Update

Memo

To: Finance and Personnel Committee

From: Craig Moser, City Administrator

Meeting Date: October 12, 2026

Subject: 2025 Audit Update

The City's contracted audit firm, CliftonLarsonAllen (CLA) will be onsite on Tuesday, October 13th to work with City staff on any remaining audit items required for completion of the City's 2025 Audit.

Commercial Fields
PARTNERS
CLINTONVILLE, WISCONSIN

PROPOSED HOUSING DEVELOPMENT

Clintonville, WI

City-owned site, TIF #9

~196
units in Phase 1
13 buildings, north parcel

~736
units at full build
40 buildings

- Market-rate, two-story walk-up buildings of about 14 to 26 units each (prototype 22 units, 310 ft x 56 ft), with a drive-up stall and garage for every unit.
- Phase 1 builds out one building at a time, paced to leasing demand.
- Parks, walking paths and stormwater ponds in every section.
- Final unit count, phasing, and layout will follow the site plan and City approvals.



Concept style: 3-D rendering of a similar project

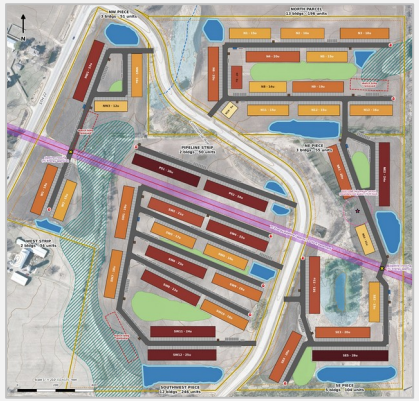

CONCEPT SITE LAYOUT

40 buildings in seven sections across parcels 30 13 11 2 and 30 13 14. Phase 1 is the north parcel (13 buildings).

Preliminary concept site layout – subject to survey, wetland delineation, pipeline and City review

Our Work

Our construction team brings over 25 years of general contracting and design-build experience, taking projects from initial design concepts to final completion.



Multifamily apartments, 3-D rendering



Attached residential, 3-D rendering



Two-bedroom unit, 3-D model



Apartment interior, 3-D rendering



Open living space, 3-D rendering



Multifamily site plan

Agreement

Clintonville Multifamily Housing Project

City of Clintonville and Commercial Fields Partners LLC

Date: _____, 2026

This Agreement provides the Developer a Right of First Refusal and Exclusive Negotiation Rights. Such agreement is between the City of Clintonville (the "City") and Commercial Fields Partners LLC (the "Developer"). This agreement is for the purposes of granting rights and limitations on the following parcels for purposes of a multifamily housing project on the Clintonville Commercial Fields site (parcels 30 13 11 2 and 30 13 14).

1. Project

Market-rate, two-story walk-up apartment buildings of about 22 units each, built in phases on the site, up to approximately 484 units in total. Final unit count, phasing, and layout will follow the site plan and City approvals and will respect the pipeline no-build area, wetlands, and required setbacks.

2. Consideration:

The Developer will pay the City of Clintonville the sum of $5,000 for this agreement. The City, however, agrees to hold such funds to be applied solely to a consultant (Ehlers) for review of the Developer's package and proposals.

3. Developer Commitments

The Developer will prepare the full financial review package for Ehlers, including the assistance request, an Excel proforma and sources and uses with and without incentives, cost detail, land valuation support, site and architectural plans with unit counts, and a schedule. The Developer will deliver it within 21 days after this Option Agreement is signed by both parties.

4. Exclusive Negotiation

For 120 days after signing (the "Exclusivity Period"), the City will negotiate the development of the site only with the Developer. The City will not solicit, negotiate with, or accept proposals from any other party for residential or multifamily development of the site during that time. The parties may extend the period in writing.

5. Right of First Refusal.

For 24 months after the Exclusivity Period ends, unless a development agreement with the Developer has been signed, the City will not sell, convey, or agree to develop the site, or any part of it, for residential or multifamily use with another developer without first giving the Developer written notice of the other party's proposed terms. The Developer will then have 30 days to agree to match those terms, and if it does, the City will proceed with the Developer instead.

6. Confidentiality

Each party will keep the other's financial information confidential, except as required by Wisconsin public records law or to advisors and approving bodies.

7. General

Each party bears its own costs. This Option Agreement does not obligate either party to complete a transaction, and neither party is bound any construction or action until a development agreement is approved and signed. It is governed by Wisconsin law and may be signed in counterparts, including

electronically. City signature is subject to any required Common Council approval.

CITY OF CLINTONVILLE	COMMERCIAL FIELDS PARTNERS LLC
By: _____	By: _____
Name: Craig Moser	Name:
Title: City Administrator	Title: Authorized Representative
Date: _____	Date: _____